PHILIPS

Data handbook

Electronic components and materials

Electron tubes

Part 5a October 1979

Cathode-ray tubes

ELECTRON TUBES

PART 5a - OCTOBER 1979

CATHODE-RAY TUBES

GENERAL AND SCREEN TYPES

INSTRUMENT TUBES

MONITOR AND DISPLAY TUBES

CRTs FOR SPECIAL APPLICATIONS

ASSOCIATED ACCESSORIES

INDEX
MAINTENANCE TYPE LIST
OBSOLESCENT TYPE LIST

DATA HANDBOOK SYSTEM

Our Data Handbook System is a comprehensive source of information on electronic components, sub-assemblies and materials; it is made up of three series of handbooks each comprising several parts.

ELECTRON TUBES	BLUE
SEMICONDUCTORS AND INTEGRATED CIRCUITS	RED
COMPONENTS AND MATERIALS	GREEN

The several parts contain all pertinent data available at the time of publication, and each is revised and reissued periodically.

Where ratings or specifications differ from those published in the preceding edition they are pointed out by arrows. Where application information is given it is advisory and does not form part of the product specification.

If you need confirmation that the published data about any of our products are the latest available, please contact our representative. He is at your service and will be glad to answer your inquiries.

This information is furnished for guidance, and with no guarantee as to its accuracy or completeness; its publication conveys no licence under any patent or other right, nor does the publisher assume liability for any consequence of its use; specifications and availability of goods mentioned in it are subject to change without notice; it is not to be reproduced in any way, in whole or in part without the written consent of the publisher.

October 1977

ELECTRON TUBES (BLUE SERIES)

Part 1a	December 1975	ET1a 12-75	**Transmitting tubes for communication, tubes for r.f. heating** Types PE05/25 to TBW15/25
Part 1b	August 1977	ET1b 08-77	**Transmitting tubes for communication, tubes for r.f. heating, amplifier circuit assemblies**
Part 2a	November 1977	ET2a 11-77	**Microwave tubes** Communication magnetrons, magnetrons for microwave heating, klystrons, travelling-wave tubes, diodes, triodes T-R switches
Part 2b	May 1978	ET2b 05-78	**Microwave semiconductors and components** Gunn, Impatt and noise diodes, mixer and detector diodes, backward diodes, varactor diodes, Gunn oscillators, sub-assemblies, circulators and isolators
Part 3	January 1975	ET3 01-75	**Special Quality tubes, miscellaneous devices**
Part 4	March 1975	ET4 03-75	**Receiving tubes**
Part 5a	October 1979	ET5a 10-79	**Cathode-ray tubes** Instrument tubes, monitor and display tubes, C.R. tubes for special applications
Part 5b	December 1978	ET5b 12-78	**Camera tubes and accessories, image intensifiers**
Part 6	January 1977	ET6 01-77	**Products for nuclear technology** Channel electron multipliers, neutron tubes, Geiger-Müller tubes
Part 7a	March 1977	ET7a 03-77	**Gas-filled tubes** Thyratrons, industrial rectifying tubes, ignitrons, high-voltage rectifying tubes
Part 7b	May 1979	ET7b 05-79	**Gas-filled tubes** Segment indicator tubes, indicator tubes, switching diodes, dry reed contact units
Part 8	July 1979	ET8 07-79	**Picture tubes and components** Colour TV picture tubes, black and white TV picture tubes, monitor tubes, components for colour television, components for black and white television.
Part 9	March 1978	ET9 03-78	**Photomultiplier tubes; phototubes**

SEMICONDUCTORS AND INTEGRATED CIRCUITS (RED SERIES)

Part 1a	August 1978	SC1a 08-78	**Rectifier diodes, thyristors, triacs** Rectifier diodes, voltage regulator diodes (> 1,5 W), transient suppressor diodes, rectifier stacks, thyristors, triacs
Part 1b	May 1977	SC1b 05-77	**Diodes** Small signal germanium diodes, small signal silicon diodes, special diodes, voltage regulator diodes (< 1,5 W), voltage reference diodes, tuner diodes
Part 2	November 1977	SC2 11-77	**Low-frequency and dual transistors***
Part 2	June 1979	SC2 06-79	**Low-frequency power transistors**
Part 3	January 1978	SC3 01-78	**High-frequency, switching and field-effect transistors**
Part 4a	December 1978	SC4a 12-78	**Transmitting transistors and modules**
Part 4b	September 1978	SC4b 09-78	**Devices for optoelectronics** Photosensitive diodes and transistors, light emitting diodes, photocouplers, infrared sensitive devices, photoconductive devices
Part 4c	July 1978	SC4c 07-78	**Discrete semiconductors for hybrid thick and thin-film circuits**
Part 5a	November 1978	SC5a 11-76	**Professional analogue integrated circuits**
Part 5b	March 1977	SC5b 03-77	**Consumer integrated circuits** Radio-audio, television
Part 6	October 1977	SC6 10-77	**Digital integrated circuits** LOCMOS HE4000B family
Part 6b	August 1979	SC6b 08-79	**ICs for digital systems in radio and television receivers**
Signetics integrated circuits	1978		Bipolar and MOS memories Bipolar and MOS microprocessors Analogue circuits Logic - TTL

* Low-frequency general purpose transistors will be transferred to SC3 later in 1979. The old book SC2 11-77 should be kept until then.

COMPONENTS AND MATERIALS (GREEN SERIES)

Part 1	July 1979	CM1 07-79	**Assemblies for industrial use** PLC modules, high noise immunity logic FZ/30-series, NORbits 60-series, 61-series, 90-series, input devices, hybrid integrated circuits, peripheral devices
Part 2a	October 1977	CM2a 10-77	**Resistors** Fixed resistors, variable resistors, voltage dependent resistors (VDR), light dependent resistors (LDR), negative temperature coefficient thermistors (NTC), positive temperature coefficient thermistors (PTC), test switches
Part 2b	February 1978	CM2b 02-78	**Capacitors** Electrolytic and solid capacitors, film capacitors, ceramic capacitors, variable capacitors
Part 3a	September 1978	CM3a 09-78	**FM tuners, television tuners, surface acoustic wave filters**
Part 3b	October 1978	CM3b 10-78	**Loudspeakers**
Part 4a	November 1978	CM4a 11-78	**Soft ferrites** Ferrites for radio, audio and television, beads and chokes, Ferroxcube potcores and square cores, Ferroxcube transformer cores
Part 4b	February 1979	CM4b 02-79	**Piezoelectric ceramics, permanent magnet materials**
Part 6	April 1977	CM6 04-77	**Electric motors and accessories** Small synchronous motors, stepper motors, miniature direct current motors
Part 7	September 1971	CM7 09-71	**Circuit blocks** Circuit blocks 100 kHz-series, circuit blocks 1-series, circuit blocks 10-series, circuit blocks for ferrite core memory drive
Part 7a	January 1979	CM7a 01-79	**Assemblies** Circuit blocks 40-series and CSA70 (L), counter modules 50-series, input/output devices
Part 8	June 1979	CM8 06-79	**Variable mains transformers**
Part 9	August 1979	CM9 08-79	**Piezoelectric quartz devices** Quartz crystal units, temperature compensated crystal oscillators
Part 10	April 1978	CM10 04-78	**Connectors**

GENERAL AND SCREEN TYPES

Some devices are labelled

Maintenance type

Obsolescent type

or

Obsolete type

Maintenance type - Available for equipment maintenance
No longer recommended for equipment production.

Obsolescent type - Available until present stocks are exhausted.

Obsolete type - No longer available.

LIST OF SYMBOLS

Symbols denoting electrodes and electrode connections	
Heater or filament	f
Cathode	k
Grid Grids are distinguished by means of an additional numeral; the electrode nearest to the cathode having the lowest number.	g
Deflection plates intended for deflection in horizontal direction.	x_1, x_2
Deflection plates intended for deflection in vertical direction. Sectioned deflection plates are indicated by an additional decimal e.g. $y_{1.1}$ $y_{1.2}$ and $y_{2.1}$ $y_{2.2}$	y_1, y_2
External conductive coating	m
Fluorescent screen	ℓ
Tube pin which must not be connected externally	i.c.
Tube pin which may be connected externally	n.c.
Symbols denoting voltages	
Symbol for voltage, followed by an index denoting the relevant electrode.	V
Heater or filament voltage	V_f
Peak value of a voltage	V_p
Peak to peak value of a voltage	V_{pp}

Symbols denoting currents

Remark I The positive electrical current is directed opposite to the direction of the electron current.

Remark II The symbols quoted represent the average values of the concerning currents unless otherwise stated.

Symbol for current followed by an index denoting the relevant electrode.	I
Heater or filament current	I_f

Symbols denoting powers

Dissipation of the fluorescent screen	W_ℓ
Grid dissipation	W_g

Symbols denoting capacitances

See IEC Publication 100.

Symbols denoting resistances

Symbol for resistance followed by an index for the relevant electrode pair. When only one index is given the second electrode is the cathode.	R

When R is replaced by Z the "resistance" should read "impedance".

Symbols denoting various quantities

Luminance	B
Frequency	f
Magnetic field strength	H
Deflection coefficient	M

GENERAL OPERATIONAL RECOMMENDATIONS CATHODE-RAY TUBES

GENERAL

Unless otherwise stated the data are given for a nominal tube.

LIMITING VALUES

Unless otherwise stated the tubes are rated according to the absolute maximum rating system.

HEATER

Parallel operation

The heater voltage must be within ±7 % of the nominal value when the supply voltage is at its nominal value, and when a tube having the published heater characteristics is employed.
This figure is permissible only if the voltage variation is dependent upon more than one factor. In these circumstances the total tolerance may be taken as the square root of the sum of the squares of the individual deviations arising from the effect of the tolerances of the separate factors, providing no one of these deviations exceeds ±5 %. Should the voltage variation depend on one factor only, the voltage variation must not exceed ±5 %.

Series operation

The heater current must be within ±5 % of the nominal value when the supply voltage is at its nominal value and a tube having the published heater characteristics is employed. This figure is permissible only if the current variation is dependent upon more than one factor. In these circumstances the total tolerance may be taken as the square root of the sum of the squares of the individual deviations arising from the effects of the tolerances of the separate factors, providing no one of these deviations exceeds ±3.5 %. Should the total current variation depend upon one factor only, the current variation must not exceed ±3.5 %.
When calculating the tolerances of associated components, the ratio of the change of heater voltage to the change of heater current in a typical series chain including a cathode ray tube is taken as 1.8, both deviations being expressed as percentages.

HEATER (continued)

With certain combinations of valves and tube, differences in the thermal inertia may result in particular heaters being run at exceedingly high temperature during the warming up period. During this period unless otherwise stated in the published data, it is permissible for the heater voltage of the tube to rise to a maximum value of 50 % in excess of the nominal rated value when using a tube with the published heater characteristics. A surge limiting device may be necessary in order to meet this requirement. When measuring the surge value of heater voltage, it is important to employ a peak reading device, such as an oscilloscope.

In addition to the quoted above, fluctuations in the mains supply voltage not exceeding ±10 % are permissible. These conditions are, however, the worst which are acceptable and it is better practise to maintain the heater as close to its published ratings as possible. Furthermore in all types of equipment closer adjustment of heater voltage or current will react favourably upon tube life and performance.

CATHODE

The potential difference between cathode and heater should be as low as possible and in any case must not exceed the limiting value given on the data sheets for individual tubes. Operation with the heater positive with respect to cathode is not recommended. In order to avoid excessive hum the A.C. component of the heater-to-cathode voltage should be as low as possible e.g. less than 20 V_{rms}. When the heater is in a series chain or earthed, the 50 c/s impedance between heater and cathode should not exceed 100 kΩ. If the heater is supplied from separate transformer windings the resistance between heater and cathode must not exceed 1 MΩ.

ELECTRODES

In no circumstances should the tube be operated without a D.C. connection between each electrode and the cathode. The total effective impedance between any electrode and the cathode should be as low as possible and must never be allowed to exceed the published maximum value.

ELECTRODE VOLTAGES

Reference point for electrode voltages is the cathode. For cathode drive service the reference point is grid No.1.

Grid cut-off voltages

Values are given for the limits of grid cut-off voltage per unit of the first accelerator voltage. The brightness control voltage should be arranged so that it can handle any tube within the limits shown, at the appropriate first accelerator voltage.

First accelerator voltage

The first accelerator electrode of a so called unipotential lens provides by applying a fixed voltage independent focus and brightness controls. Care should be taken not to exceed the maximum and minimum limits for reasons of reliability and performance.

Deflection blanking electrode voltage

The mean potential of the deflection blanking electrode should be equal to that of the first accelerator.
If applicable the voltage difference (ΔV_{g_3}) given in the data should be applied to the beam blanking electrode to obtain beam blanking of a stated beam current for all tubes of the relevant type.

Focusing voltage

The focusing electrode voltage limits are given in the data. The focus voltage supply should be arranged such that it can handle these limits, so that in any tube the cross-sectional area of the electron-beam on the screen can be optimally displayed. As the focus current is very limited a high resistance series chain may be used.

Astigmatism control electrode voltage

To achieve optimum performance under all conditions it is desirable to apply a voltage for control of astigmatism (a difference in potential of this electrode and the y plates). The required range to cover any tube is given in the relevant data.

Beam centring electrode voltage

The beam centring electrode facilitates the possibility to centre the scan in x-direction with respect to the geometric centre of the faceplate by applying a voltage, the limits of which are given in the relevant data, to this electrode. Optimum condition is obtained when the brightness at both left and right edges of the scan are equal.

Deflection plate shield voltage

It is essential that the deflection plate shield voltage equals the mean y plates voltage.

Geometry control electrode voltage

By varying the potential of this electrode the necessary range of which is given in the relevant data the possible occurrence of pin-cushion and barrel-pattern distortion can be controlled.

Deflection voltages

For optimum performance it is essential that true symmetrical voltages are applied. It should further be noted that the mean x and y plate potentials must be equal. Moreover the deflection plate shield voltage, the mean astigmatism control voltage, if applicable the mean beam centring electrode voltage and the geometry electrode voltage should also be equal to the mean x and y plate potentials. If use is made of the full deflection capabilities of the tube, the deflection plates will intercept part of the electron beam near the edge of the scan. Therefore a low impedance deflection plate drive is necessary.

Raster distortion and its determination

Limits of raster distortion are given for most tubes.
A graticule, consisting of concentric rectangles is aligned with the electrical x axis of the tube. The edges of a raster will fall between these rectangles with optimum correction potentials applied.

Measuring procedure:

a) Shift the x-trace to the centre of the graticule.

b) Align horizontal centre line of graticule with the centre line of the x-trace.

c) Shift x-trace vertically between resp. upper and lower two horizontal lines of graticule.
The centre of the x-trace now will not fall outside the area bounded by the horizontal graticule lines.

d) Without moving the graticule, switch to a vertical trace and shift this trace horizontally (resp. left and right) between the pairs of vertical lines of the graticule, and also now the centre of the y-trace will not fall outside the area bounded by the vertical graticule lines.

e) Focus and astigmatism will be adjusted for optimum performance.

f) Pattern geometry correction will be adjusted for optimum performance in the sense of minimizing simultaneously the deviation of the centre of x- respectively y-trace.

Linearity

The linearity is defined as the sensitivity at a deflection of 75 % of the useful scan with respect to differ from the sensitivity at a deflection of 25 % of the useful scan. These sensitivities will not differ by more than the indicated value.

Post deflection shield voltage

In order to optimize contrast in mesh tubes a fixed negative voltage with respect to the geometry control electrode voltage should be applied. The range is given in the data.

Helix resistance

In order to calculate the high tension supply a minimum resistance is given in the data.

Final accelerator voltage

Tubes with PDA are designed for a given final accelerator voltage to astigmatism control electrode voltage ratio. Operation at higher ratio may result in changes in deflection uniformity and pattern distortion.

High tension supply

In order to avoid damage of the screen it is important that prior to the high tension a deflection voltage e.g. the time base voltage is applied.

LINE WIDTH

Shrinking raster method. Conditions as given in the relevant data.
Focus and astigmatism potentials should be adjusted for optimum performance. Optimum performance is that adjustment which will simultaneously minimize the horizontal and vertical trace widths at the centre of the useful scan.
The raster shall be compressed until the line structure first disappears or begins to overlap or show reverse line structure.
The line width is equal to the quotient of the width of the compressed pattern transverse to the line structure divided by the number of lines which are being scanned.
In older types the line width is measured on a circle with the aid of a microscope.

CAPACITANCES

Unless otherwise stated the values given are nominal values measured on a cold tube on the tube contacts. The contacts and measuring leads or sockets being screened.

MOUNTING

Unless otherwise stated the mounting position is any. However, the tube should not be supported by the base alone and under no circumstances should the socket be allowed to support the tube.
To avoid dangerous glass strain care should be taken when installing the tube.

Shielding

The tubes must be shielded against electrical and magnetic fields.
Special attention should be paid to the mounting of transformers, coils etc.

SCREEN

To prevent screen burn stationary or slow moving spots together with high screen currents should be avoided.
If measurements are to be made under high ambient light conditions it is advisable to use a contrast improving filter and or a light hood.

TRACKING ERROR

Tracking is the ability of a multigun tube to superimpose simultaneously information from each gun.
Tracking error is the maximum allowable distance between the displays of any two guns.

PHOTOMETRIC UNITS

1. S.I. photometric units

quantity	S.I. units	remarks
luminous intensity	cd (candela)	
luminous flux	lm (lumen)	
quantity of light	lm · s	
luminance	cd/cm^2	1 cd/m^2 = 1 nit
luminous exitance	lm/m^2	formerly luminous emittance
illuminance	lx (lux)	formerly illumination

2. Other photometric units; conversion factors

stilb = 1 candela/cm^2 = 4π lumen/cm^2

lambert = $\frac{1}{\pi}$ candela/cm^2 = 4 lumen/cm^2

apostilb = $\frac{1}{\pi}$ candela/m^2

foot lambert = $\frac{1}{\pi}$ candela/ft^2

Luminance unit conversion factors

1	stilb	cd/ft^2	lambert	foot lambert	apostilb	
equals	10^4	10,76	$3,183 \times 10^3$	3,426	0,3183	cd/m^2 (nit)

Illuminance conversion factors

1	phot (lm/cm^2)	foot-candle (lm/ft^2)	
equals	10^4	$1,076 \times 10^{-3}$	lux (lm/m^2)

RATING SYSTEMS

(in accordance with I.E.C. publication 134)

Absolute maximum rating system

Absolute maximum ratings are limiting values of operating and environmental conditions applicable to any electronic device of a specified type as defined by its published data, which should not be exceeded under the worst probable conditions.

These values are chosen by the device manufacturer to provide acceptable serviceability of the device, taking no responsibility for equipment variations, environmental variations, and the effects of changes in operating conditions due to variations in the characteristics of the device under consideration and of all other electronic devices in the equipment.

The equipment manufacturer should design so that, initially and throughout life, no absolute-maximum value for the intended service is exceeded with any device under the worst probable operating conditions with respect to supply voltage variation, equipment component variation, equipment control adjustment, load variations, signal variation, environmental conditions, and variations in characteristics of the device under consideration and of all other electronic devices in the equipment.

Design-maximum rating system

Design-maximum ratings are limiting values of operating and environmental conditions applicable to a bogey electronic device of a specified type as defined by its published data, and should not be exceeded under the worst probable conditions.

These values are chosen by the device manufacturer to provide acceptable serviceability of the device, taking responsibility for the effects of changes in operating conditions due to variations in the characteristics of the electronic device under consideration.

The equipment manufacturer should design so that, initially and throughout life, no design-maximum value for the intended service is exceeded with a bogey device under the worst probable operating conditions with respect to supply-voltage variation, equipment component variation, variation in characteristics of all other devices in the equipment, equipment control adjustment, load variation, signal variation and environmental conditions.

Design-centre rating system

Design-centre ratings are limiting values of operating and environmental conditions applicable to a bogey electronic device of a specified type as defined by its published data, and should not be exceeded under normal conditions.

These values are chosen by the device manufacturer to provide acceptable serviceability of the device in average applications, taking responsibility for normal changes in operating conditions due to rated supply-voltage variation, equipment component variation, equipment control adjustment, load variation, signal variation, environmental conditions, and variations in the characteristics of all electronic devices.

The equipment manufacturer should design so that, initially, no design-centre value for the intended service is exceeded with a bogey electronic device in equipment operating at the stated normal supply-voltage.

TYPE DESIGNATION

Two type designation systems are currently in use for our C.R. tubes.
All future tubes will have numbers in the "new system", earlier tubes will retain numbers in the "old system".

NEW CODE SYSTEM (PRO-ELECTRON TYPE DESIGNATION CODE)

The type number consists of a single letter followed by two sets of figures,and ends with one or two letters.

The first letter indicates the prime appplication of the tube:

A - Television display tube for domestic application

D - Oscilloscope tube - single trace

E - Oscilloscope tube - multiple trace

F - Radar display tube - direct view

L - Display storage tube

M - T.V. display tube for professional application - direct view

P - Display tube for professional application - projection

Q - Flying spot scanner

The first group of figures indicates the diameter or diagonal of the luminescent screen in cm.

The second group of figures is a two-figure or three-figure serial number indicating a particular design or development.

The second group of letters indicates the properties if the phosphor screen.
The first letter denotes the colour of the fluorescence or phosphorescence in the case of long or very long afterglow screens.

The second letter of this group is a serial letter to denote other specific differences in screen properties.

For the standard television tube phosphors, the letters 'W' and 'X' are used without a second letter.

A - Purple - reddish purple - bluish purple

B - Blue - purplish blue - greenish blue

D - Blue green

G - Green - bluish green - yellowish green

K - Yellow - green

L - Orange - Orange pink

R - Red - reddish orange - red purple - purplish red - pink - purplish pink

Y - Yellow - greenish yellow - yellowish orange

W - White screen for T.V. display tubes

X - Three-colour screen for T.V. display tubes

OLD SYSTEM

The type number consists of two letters followed by two sets of figures.
The first letter indicates the method of focusing and deflection:

A - Electrostatic focusing and electromagnetic deflection

D - Electrostatic focusing and electrostatic deflection

M - Electromagnetic focusing and electromagnetic deflection

The second letter indicates the properties of the phosphor screen.

See also section "Screen Phosphors"

The first group of figures:

for round tubes: screen diameter in cm

for rectangular tubes: screen diagonal in cm

The second group of figures denotes the serial number.

SCREEN TYPES

new system	old system	fluorescent colour	phosphorescent colour	persistence	equivalent Jedec designation
BA	C	purplish-blue	–	very short	–
BE	B	blue	blue	medium short	P11
BF	U*	purplish-blue	–	medium short	–
GH	H	green	green	medium short	P31
GJ	G	yellowish-green	yellowish-green	medium	P1
GK	G	yellowish-green	yellowish-green	medium	–
GM	P	purplish-blue	yellowish-green	long	P7
GP	–	bluish-green	green	medium short	P2
GR	–	green	green	long	P39
GU	–	white	white	very short	–
KC	–	yellow-green	yellow-green	medium short	–
LA	D	orange	orange	medium	–
LB	E	orange	orange	long	–
LC	F	orange	orange	very long	–
LD	L	orange	orange	very long	P33
W	W	white	–	–	P4
WA	–	white	–	–	
X	X	tri-colour screen	–	–	–
YA	Y*	yellowish-orange	yellowish-orange	medium	–

* Used in projection tubes.

SURVEY OF PERSISTENCE OF CATHODE-RAY TUBE SCREENS

screen type		application	persistence			
new system	old system			relative level of luminance		
				10%	1%	0,1%
BA	C	flying spot scanners		0,13 μs	0,4 μs	–
GU	–			0,16 μs	1,0 μs	–
BE	B	oscilloscopes		20 ms	70 ms	120 ms
GH	H			600 μs	8 ms	90 ms
GJ	G			28 ms	75 ms	120 ms
GM	P			60 ms	1,5 s	13 s
GP	–			1,2 ms	140 ms	2 s
GR	–	monitors		100 ms	1,4 s	9 s
			yellow comp.	1,3 ms	23 ms	210 ms
W	W		blue comp.	1,3 ms	20 ms	180 ms
			yellow comp.	1,3 ms	23 ms	210 ms
WA	–		blue comp.	1,3 ms	20 ms	180 ms
LA	D	radar		32 ms	110 ms	200 ms
LC	F			0,3 s	22 s	50 s
LD	L			0,5 s	45 s	100 s

OPERATING CONDITIONS

Final accelerator voltage		Screen current
Oscilloscope types	4 kV	5 μA/cm²
Monitor types	10 to 18 kV	0,1 μA/cm²
Focusing	defocused	
Excitation	sufficient for complete build-up	

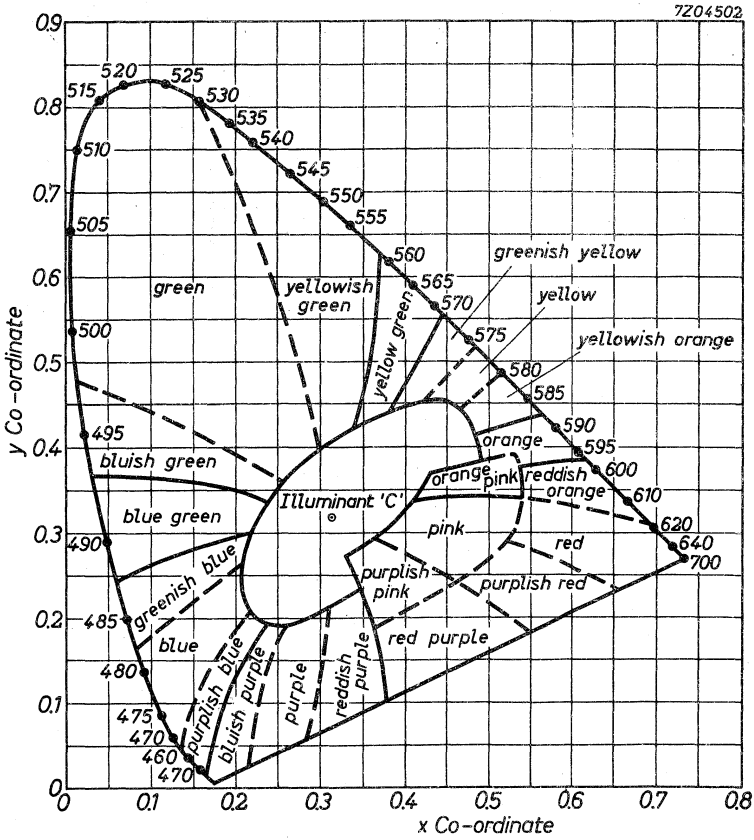
7Z04502
y Co-ordinate
x Co-ordinate
0
0.1
0.2
0.3
0.4
0.5
0.6
0.7
0.8
0.9
515
520
525
530
535
540
545
550
555
560
565
570
575
580
585
590
595
600
610
620
640
700
510
505
500
495
490
485
480
475
470
460
470
green
yellowish green
yellow green
greenish yellow
yellow
yellowish orange
orange
orange pink
reddish orange
pink
red
purplish pink
purplish red
red purple
reddish purple
purple
bluish purple
purplish blue
blue
greenish blue
blue green
bluish green
Illuminant 'C'

Kelly Chart

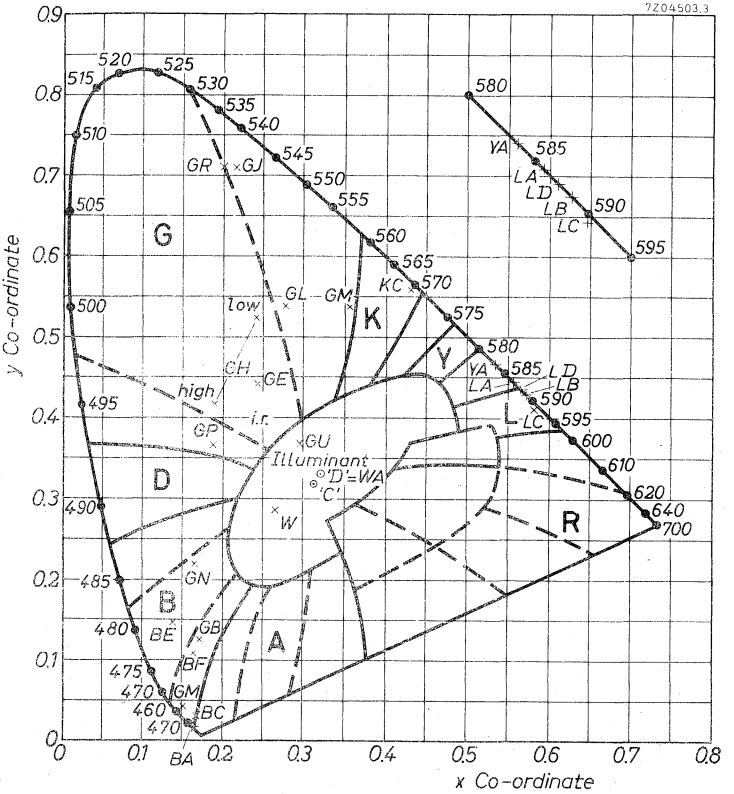

Co-ordinates of individual phosphors

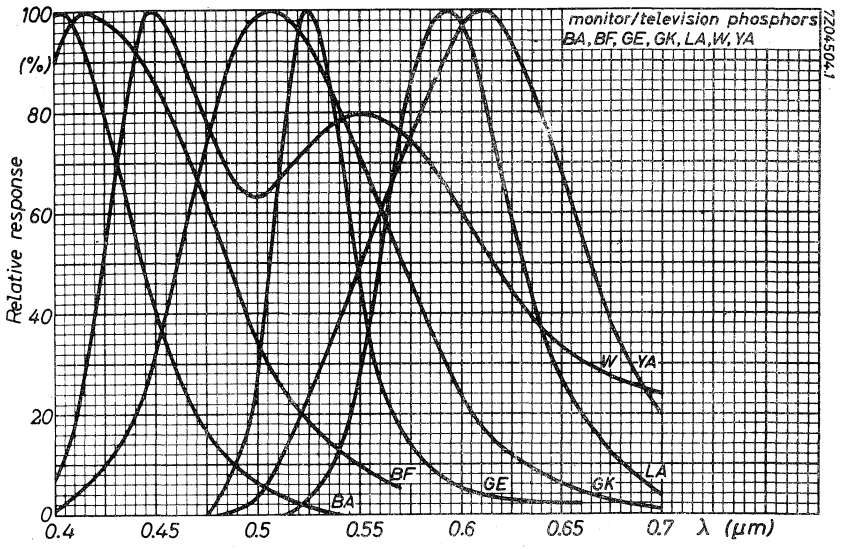
monitor/television phosphors
BA, BF, GE, GK, LA, W, YA
2204541
100
(%)
80
60
40
20
0
Relative response
0.4
0.45
0.5
0.55
0.6
0.65
0.7
λ (μm)
BA
BF
GE
GK
LA
W
YA

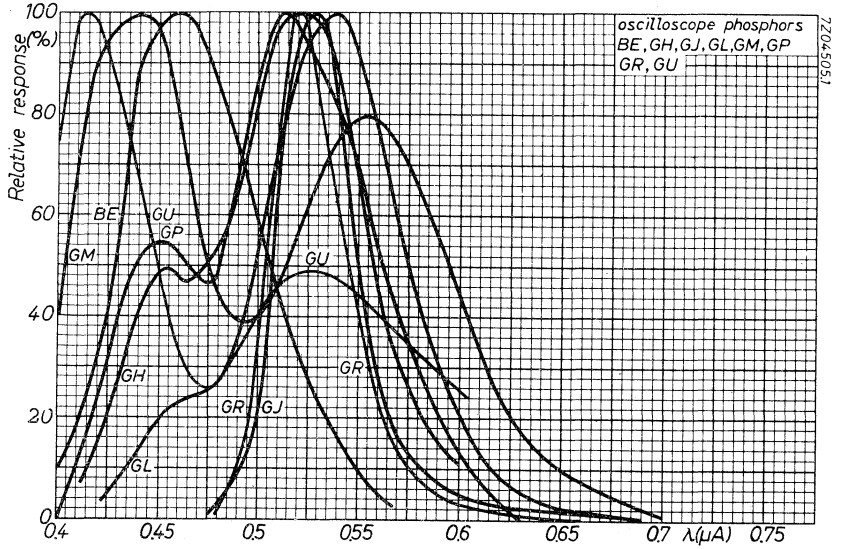
oscilloscope phosphors
BE, GH, GJ, GL, GM, GP
GR, GU
7Z045051
Relative response (%)
100
80
60
40
20
0
BE
GU
GP
GM
GU
GH
GR
GR
GJ
GL
0.4
0.45
0.5
0.55
0.6
0.65
0.7
λ(μA)
0.75

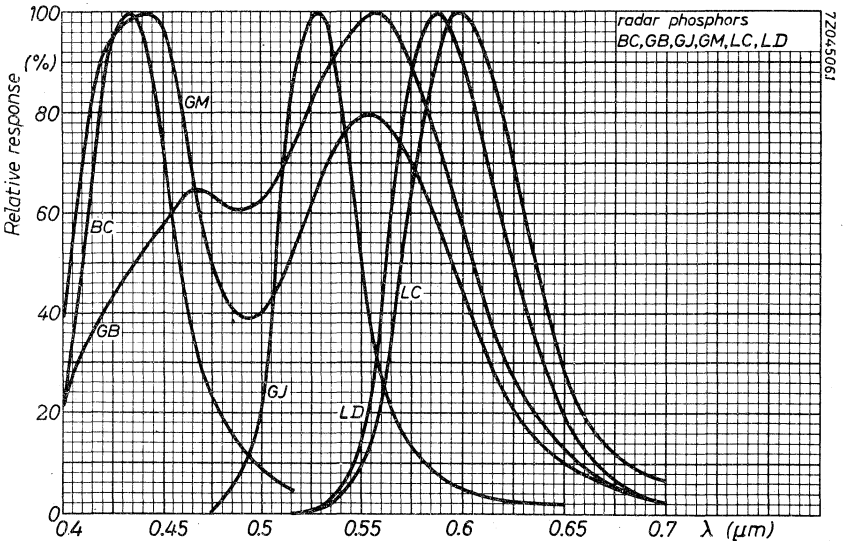
radar phosphors
BC, GB, GJ, GM, LC, LD
7Z045061
Relative response (%)
100
80
60
40
20
0
GM
BC
GB
GJ
LC
LD
0.4
0.45
0.5
0.55
0.6
0.65
0.7
λ (μm)

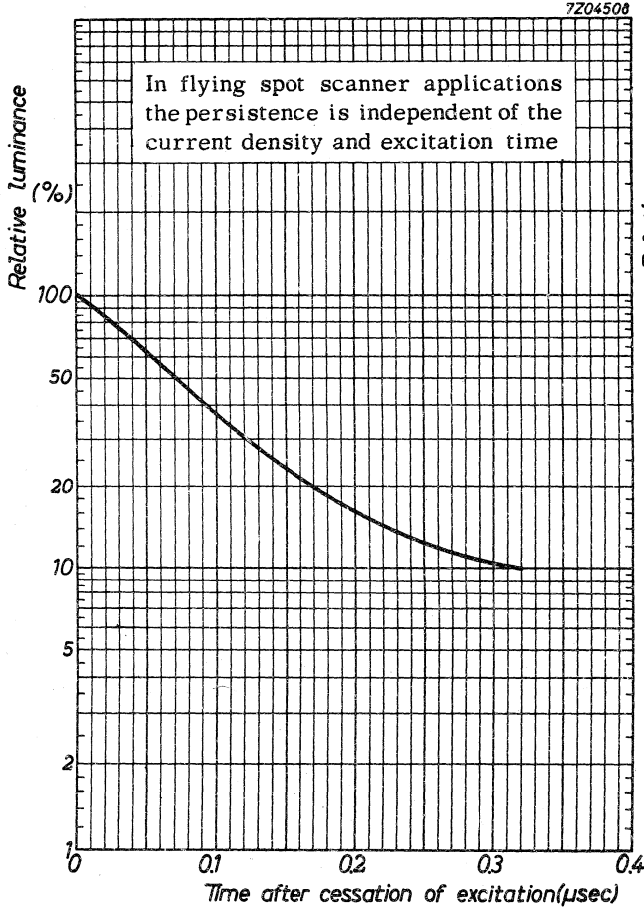
7Z04508
In flying spot scanner applications the persistence is independent of the current density and excitation time
Relative luminance (%)
100
50
20
10
5
2
1
0
0.1
0.2
0.3
0.4
Time after cessation of excitation(μsec)

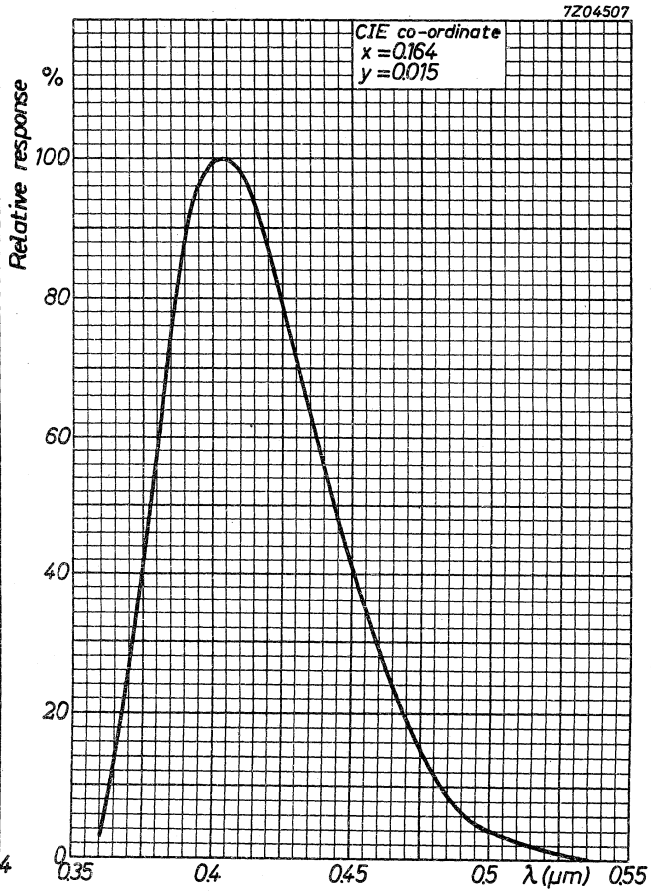
7Z04507
CIE co-ordinate
x = 0.164
y = 0.015
Relative response %
100
80
60
40
20
0
0.35
0.4
0.45
0.5
λ (μm)
0.55

BA screen

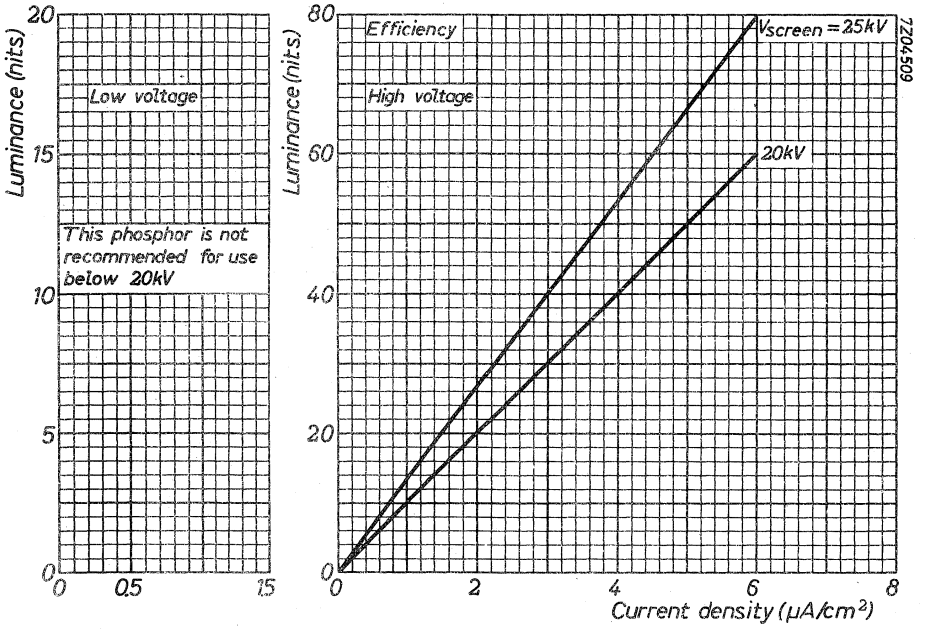
Luminance (nits)
20
15
10
5
0
Low voltage
This phosphor is not recommended for use below 20kV
0
0.5
1.5
Luminance (nits)
80
60
40
20
0
Efficiency
High voltage
Vscreen = 25kV
20kV
0
2
4
6
8
Current density (μA/cm²)
7204509

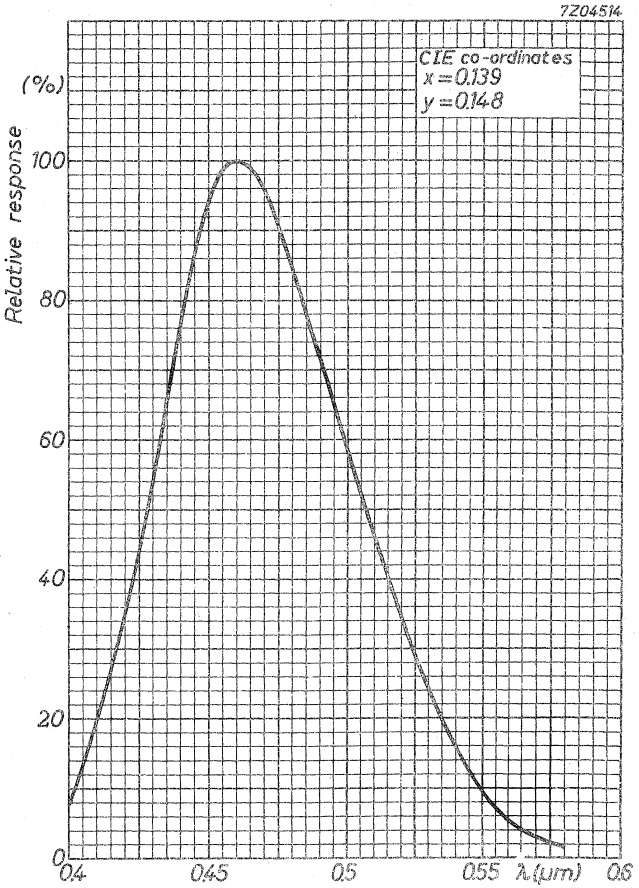
7Z04514
CIE co-ordinates
x = 0.139
y = 0.148
(%)
Relative response
100
80
60
40
20
0
0.4
0.45
0.5
0.55
λ(μm)
0.6

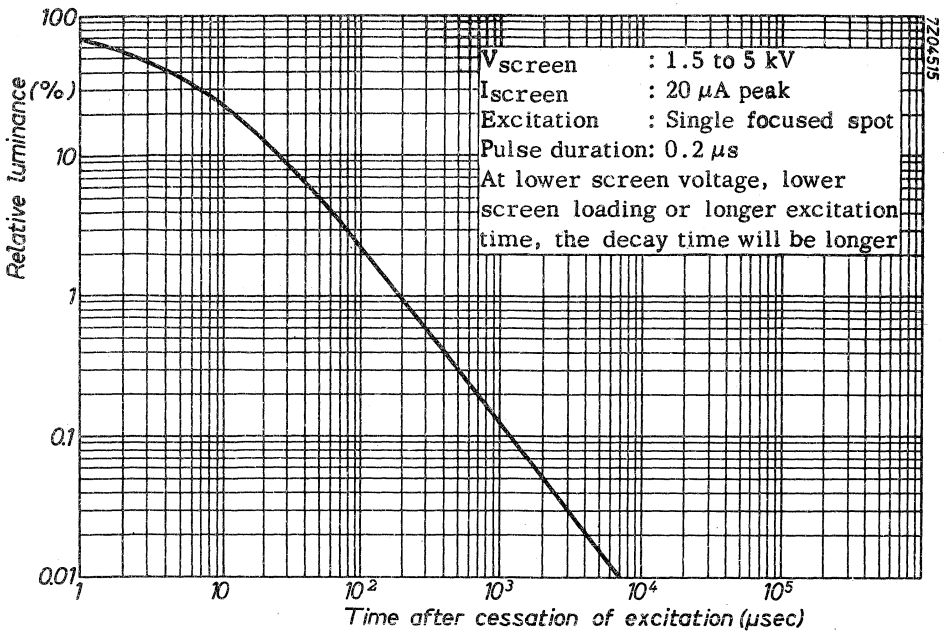
7Z04515
Relative luminance (%)
100
10
1
0.1
0.01
1
10
10²
10³
10⁴
10⁵
Time after cessation of excitation (μsec)
Vscreen : 1.5 to 5 kV
Iscreen : 20 μA peak
Excitation : Single focused spot
Pulse duration: 0.2 μs
At lower screen voltage, lower screen loading or longer excitation time, the decay time will be longer

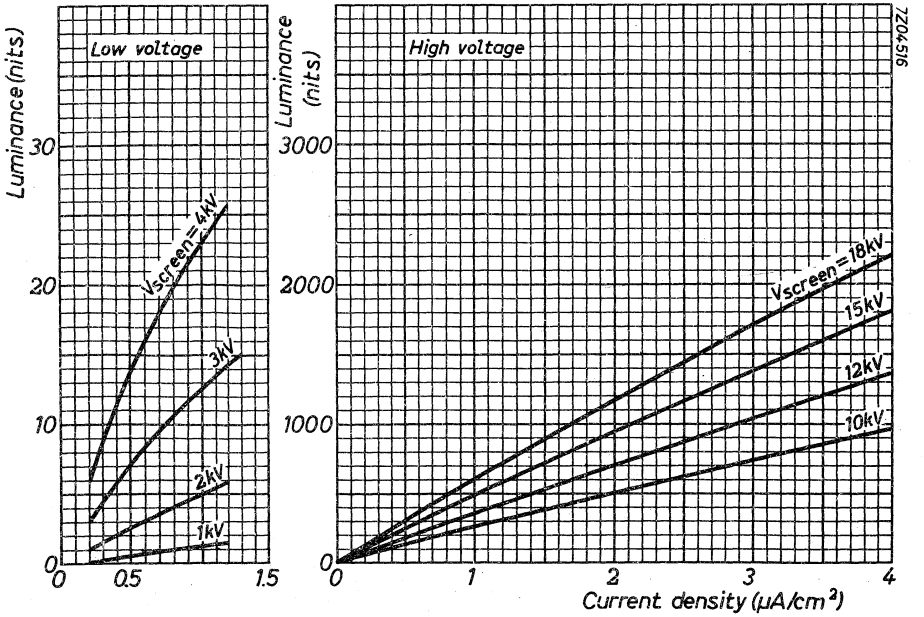
7Z04516
Low voltage
Luminance (nits)
30
20
10
0
0
0.5
1.5
Vscreen = 4kV
3kV
2kV
1kV
High voltage
Luminance (nits)
3000
2000
1000
0
0
1
2
3
4
Vscreen = 18kV
15kV
12kV
10kV
Current density (μA/cm²)

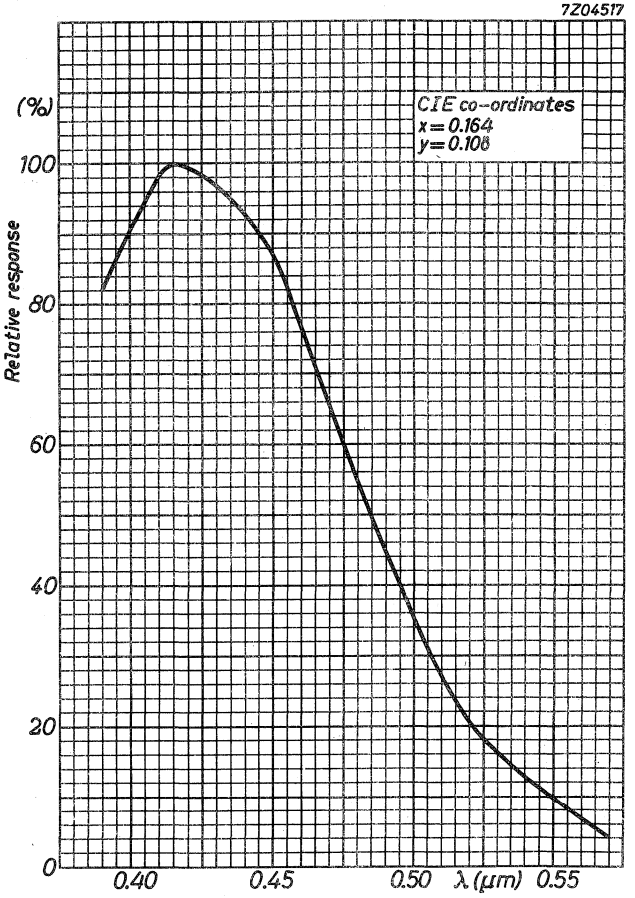
7Z04517
(%)
100
80
60
40
20
0
Relative response
CIE co-ordinates
x = 0.164
y = 0.108
0.40
0.45
0.50
λ (μm)
0.55

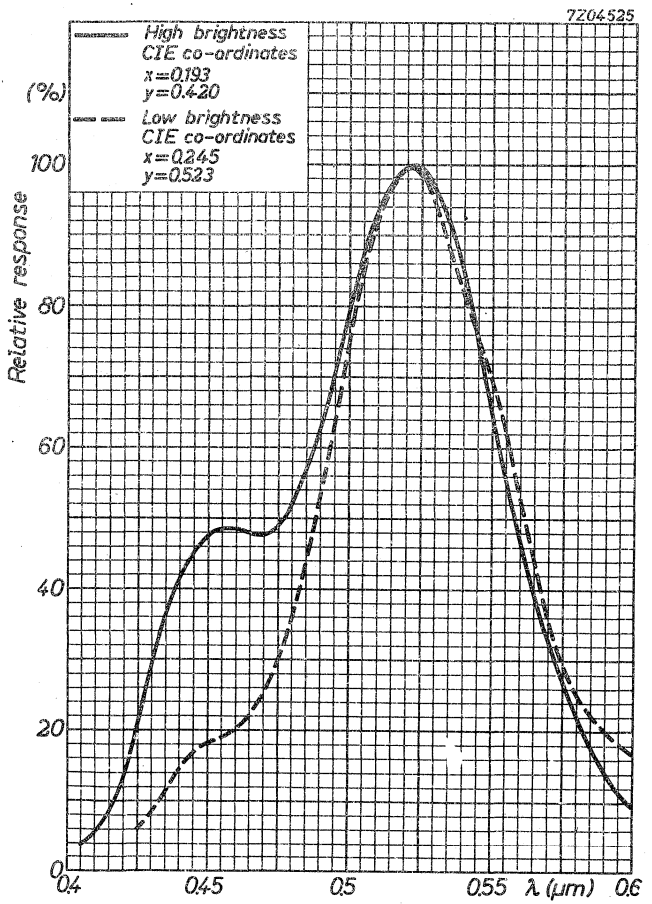
7Z04525
High brightness
CIE co-ordinates
x=0.193
y=0.420
Low brightness
CIE co-ordinates
x=0.245
y=0.523
(%)
100
80
60
40
20
0
Relative response
0.4
0.45
0.5
0.55
λ (μm)
0.6

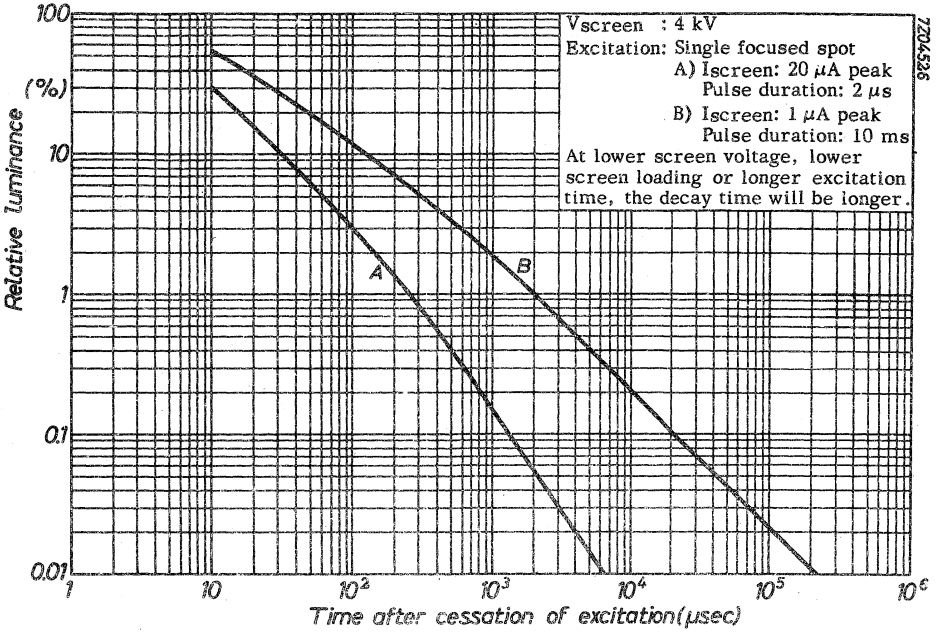
Vscreen : 4 kV
Excitation: Single focused spot
A) Iscreen: 20 μA peak
Pulse duration: 2 μs
B) Iscreen: 1 μA peak
Pulse duration: 10 ms
At lower screen voltage, lower screen loading or longer excitation time, the decay time will be longer.
7204526
Relative luminance (%)
100
10
1
0.1
0.01
A
B
1
10
10²
10³
10⁴
10⁵
10⁶
Time after cessation of excitation (μsec)

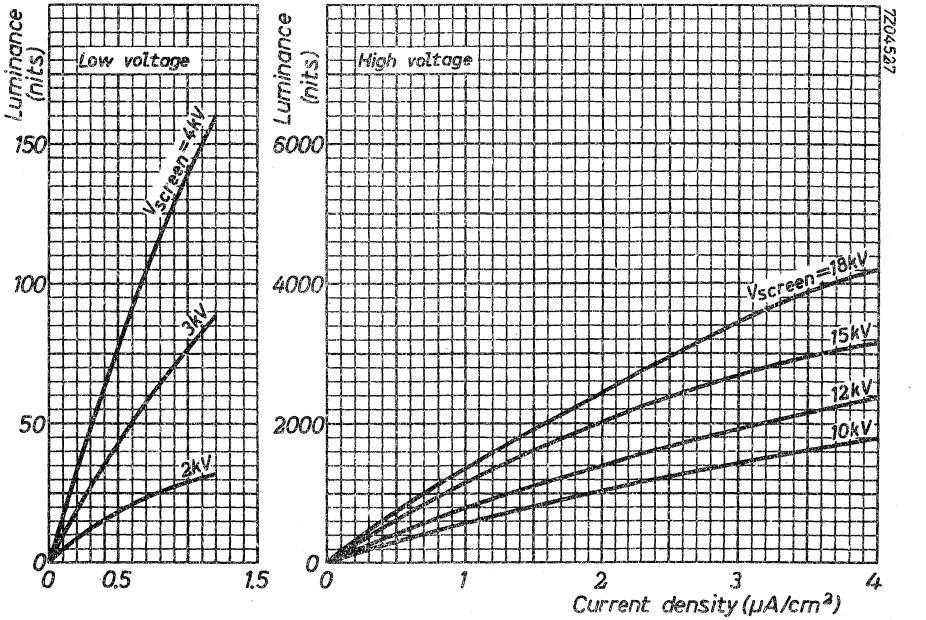
Luminance (nits)
Low voltage
Vscreen=4kV
3kV
2kV
150
100
50
0
0
0.5
1.5
Luminance (nits)
High voltage
6000
4000
2000
0
Vscreen=18kV
15kV
12kV
10kV
0
1
2
3
4
Current density (μA/cm²)
7204527

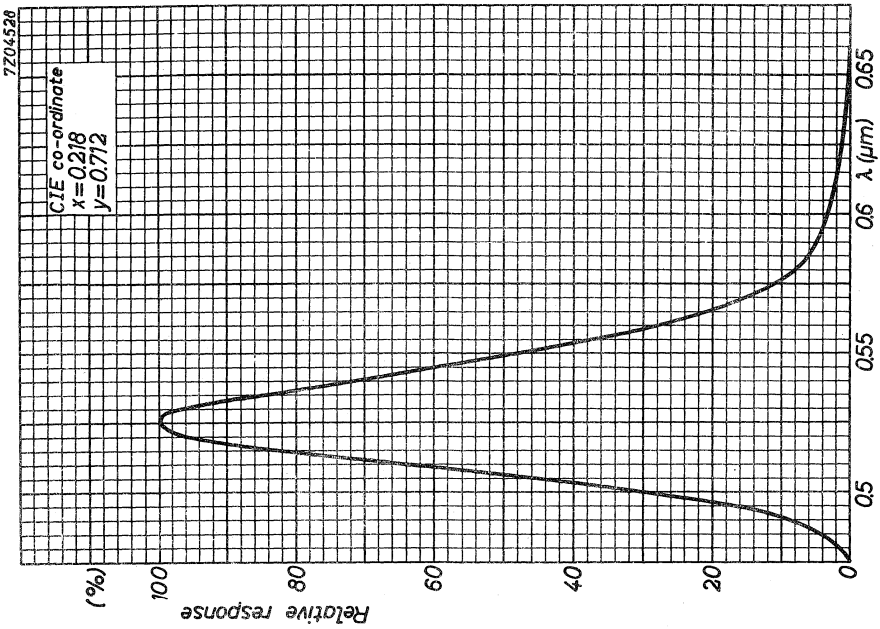
7Z04528
C.I.E. co-ordinate
x=0.218
y=0.712
Relative response
(%)
100
80
60
40
20
0
0.5
0.55
0.6
λ (μm)
0.65

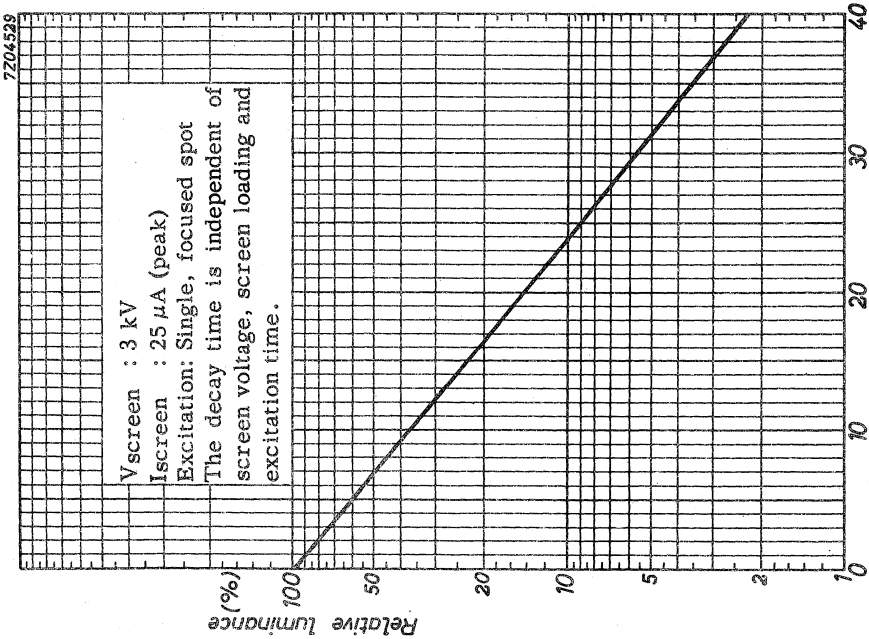
7Z04529
Vscreen : 3 kV
Iscreen : 25 μA (peak)
Excitation: Single, focused spot
The decay time is independent of screen voltage, screen loading and excitation time.
Relative luminance
(%)
100
50
20
10
5
2
1
0
10
20
30
40
Time after cessation of excitation (msec.)

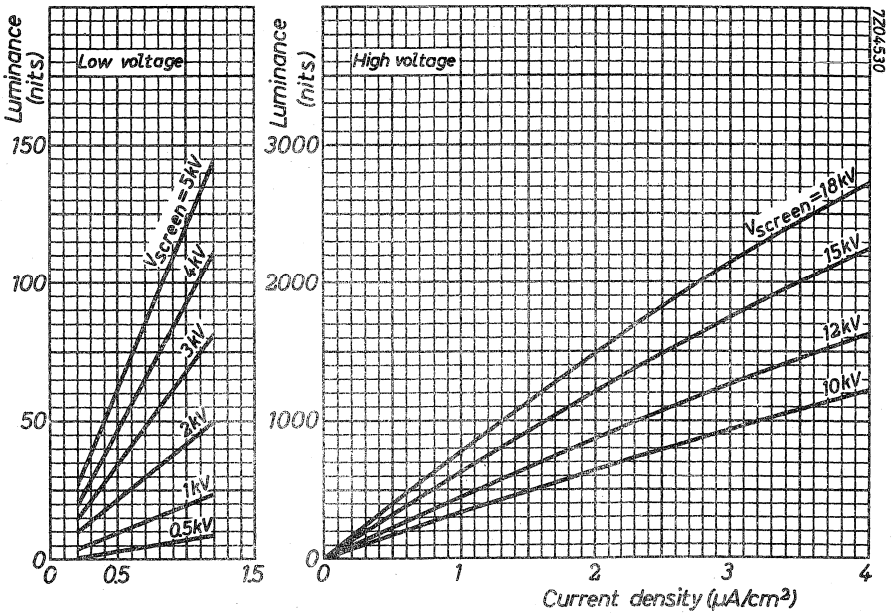
Luminance (nits)
Low voltage
150
100
50
0
0
0.5
1.5
Vscreen=5kV
4kV
3kV
2kV
1kV
0.5kV
Luminance (nits)
High voltage
3000
2000
1000
0
0
1
2
3
4
Current density (μA/cm²)
Vscreen=18kV
15kV
12kV
10kV
2204530

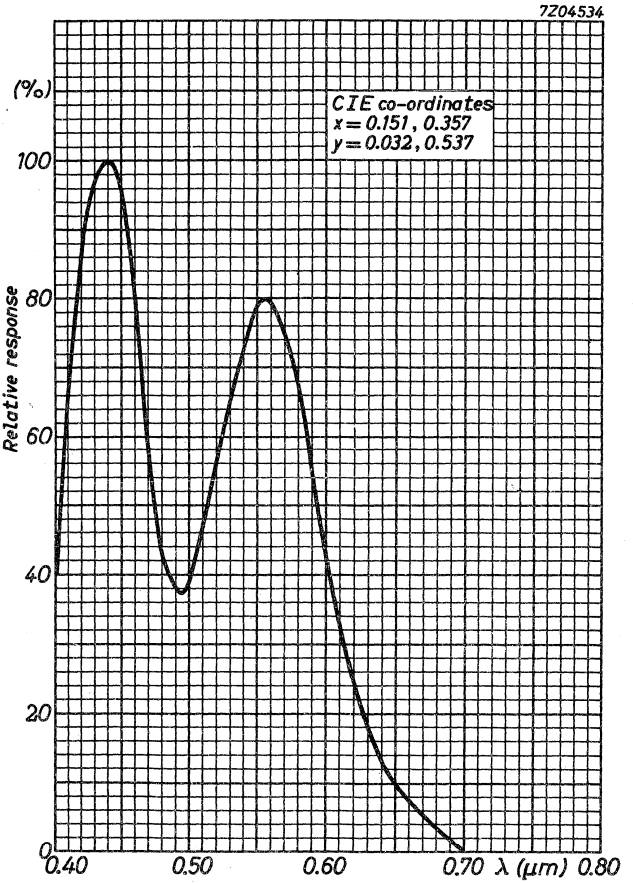
7Z04534
(%)
100
80
60
40
20
0
Relative response
CIE co-ordinates
x = 0.151, 0.357
y = 0.032, 0.537
0.40
0.50
0.60
0.70
λ (μm)
0.80

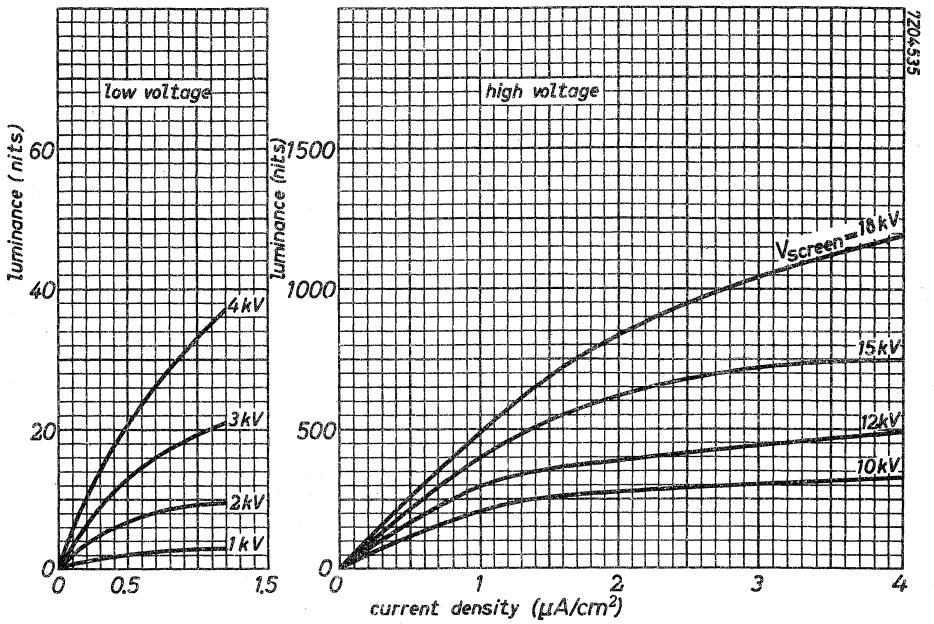
7Z04535
low voltage
high voltage
luminance (nits)
60
40
20
0
4kV
3kV
2kV
1kV
0
0.5
1.5
1500
1000
500
0
V_{screen} = 18kV
15kV
12kV
10kV
1
2
3
4
current density (μA/cm²)

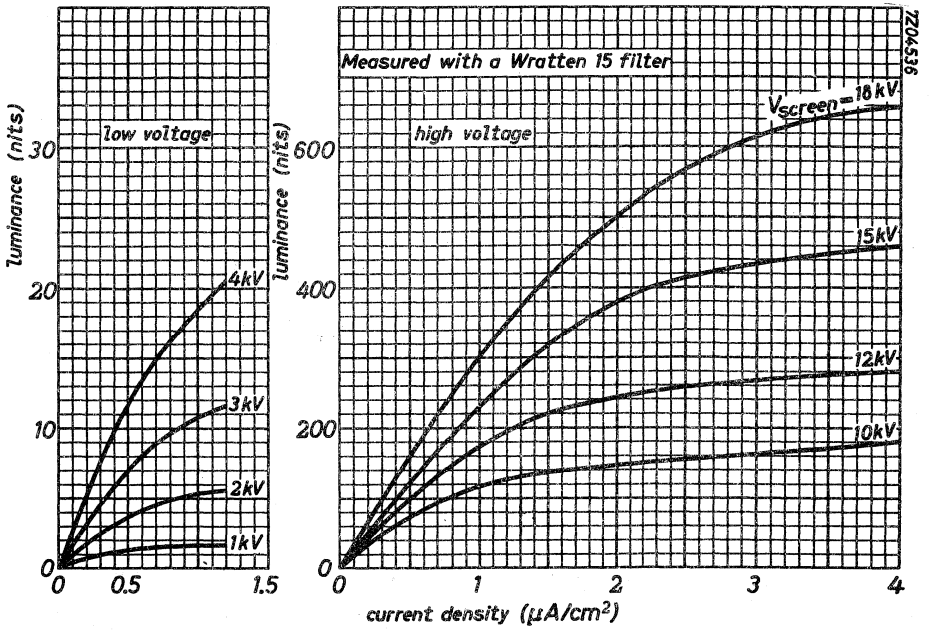
7Z04536
Measured with a Wratten 15 filter
low voltage
high voltage
luminance (nits)
30
20
10
0
4kV
3kV
2kV
1kV
0
0.5
1.5
600
400
200
0
V_{screen} = 18kV
15kV
12kV
10kV
1
2
3
4
current density (μA/cm²)

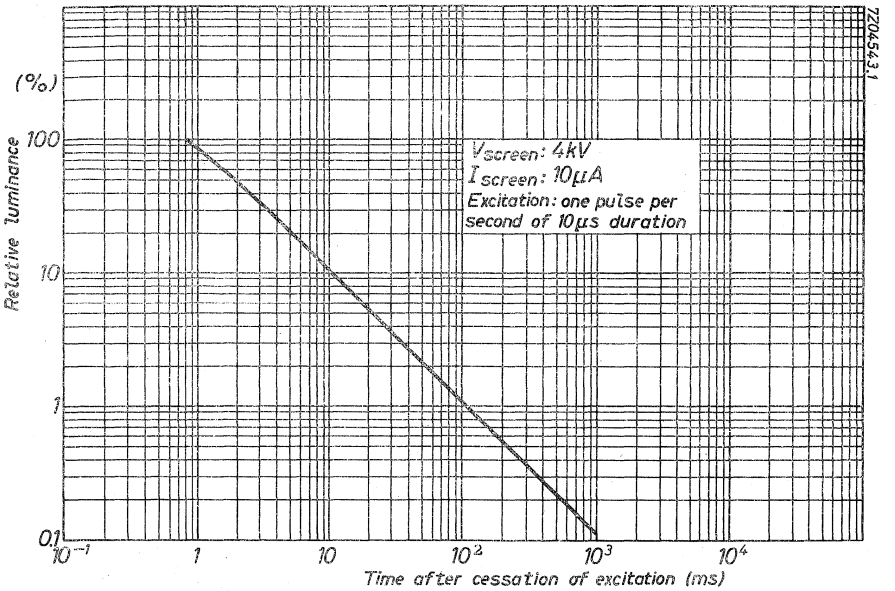
(%)
100
10
1
0,1
Relative luminance
V_{screen}: 4kV
I_{screen}: 10μA
Excitation: one pulse per second of 10μs duration
10^{-1}
1
10
10^2
10^3
10^4
Time after cessation of excitation (ms)
7204543.1

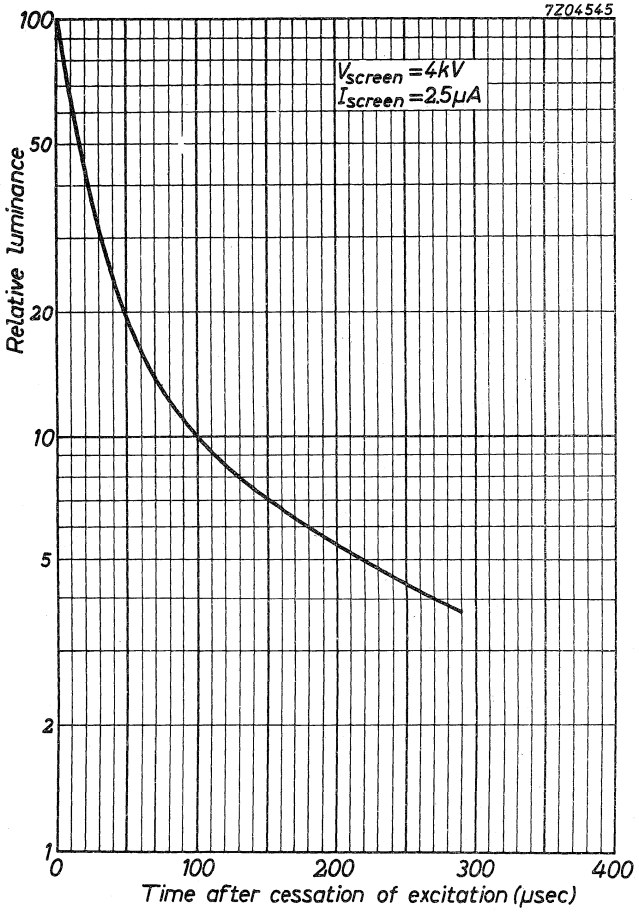
7Z04545
V_{screen} = 4kV
I_{screen} = 2.5μA
Relative luminance
100
50
20
10
5
2
1
0
100
200
300
400
Time after cessation of excitation (μsec)

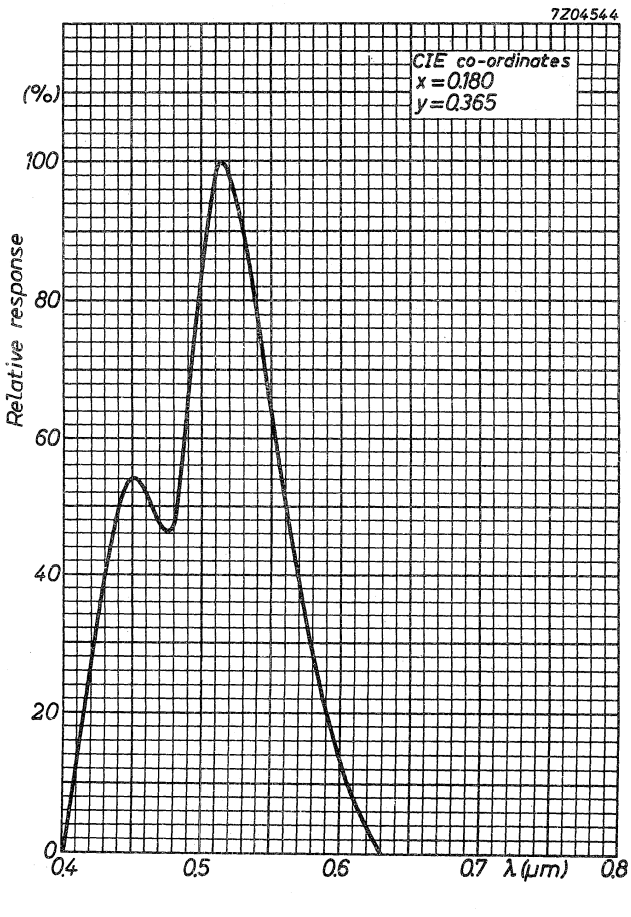
7Z04544
CIE co-ordinates
x = 0.180
y = 0.365
(%)
Relative response
100
80
60
40
20
0
0.4
0.5
0.6
0.7
λ (μm)
0.8

GP screen

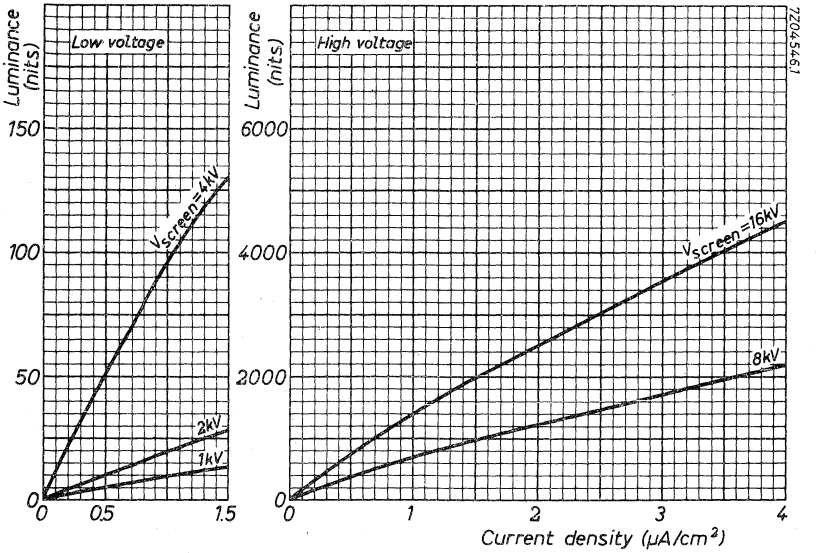
Low voltage
Luminance (nits)
150
100
50
0
0
0.5
1.5
V_{screen}=4kV
2kV
1kV
High voltage
Luminance (nits)
6000
4000
2000
0
0
1
2
3
4
V_{screen}=16kV
8kV
Current density (μA/cm²)
7204-5491

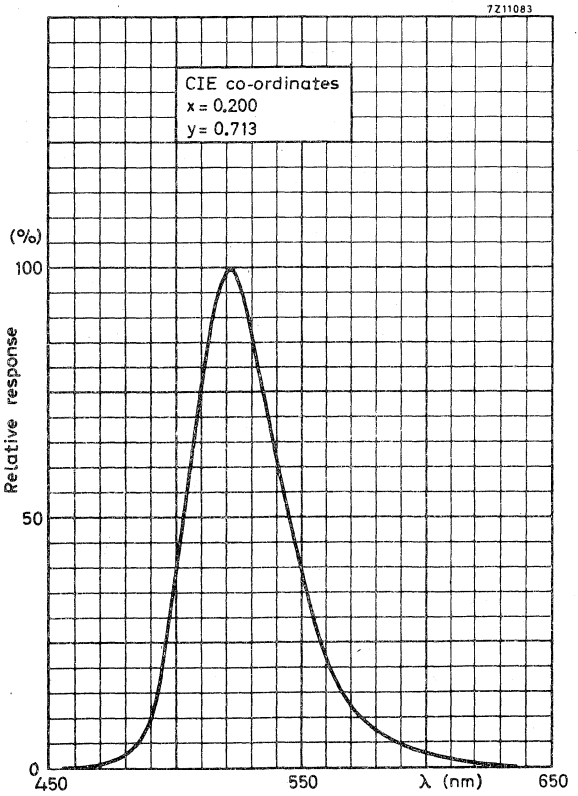
7Z11083
CIE co-ordinates
x = 0,200
y = 0,713
(%)
100
50
0
Relative response
450
550
λ (nm)
650

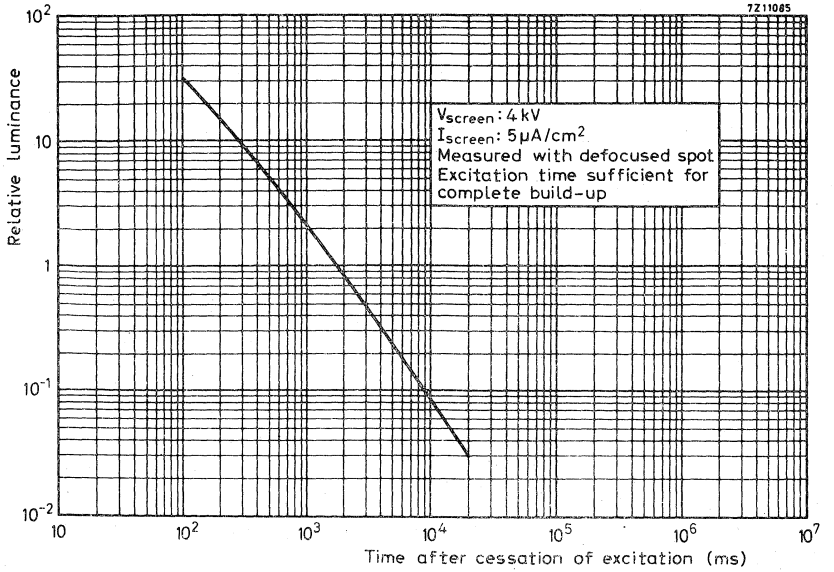
7Z11085
Relative Luminance
10^2
10
1
10^{-1}
10^{-2}
V_{screen}: 4 kV
I_{screen}: 5 μA/cm²
Measured with defocused spot
Excitation time sufficient for complete build-up
10
10^2
10^3
10^4
10^5
10^6
10^7
Time after cessation of excitation (ms)

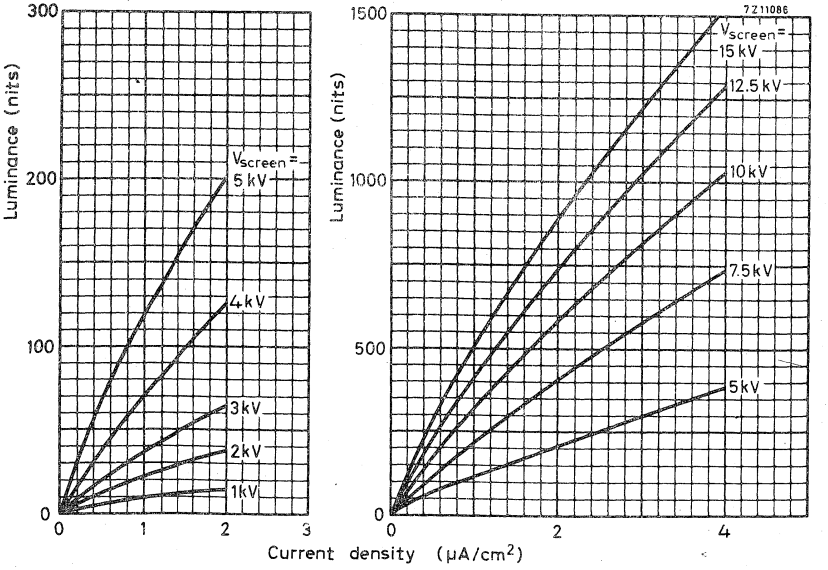
Luminance (nits)
300
200
100
0
V_{screen} =
5 kV
4 kV
3 kV
2 kV
1 kV
0
1
2
3
7Z11086
Luminance (nits)
1500
1000
500
0
V_{screen} =
15 kV
12.5 kV
10 kV
7.5 kV
5 kV
0
2
4
Current density (μA/cm²)

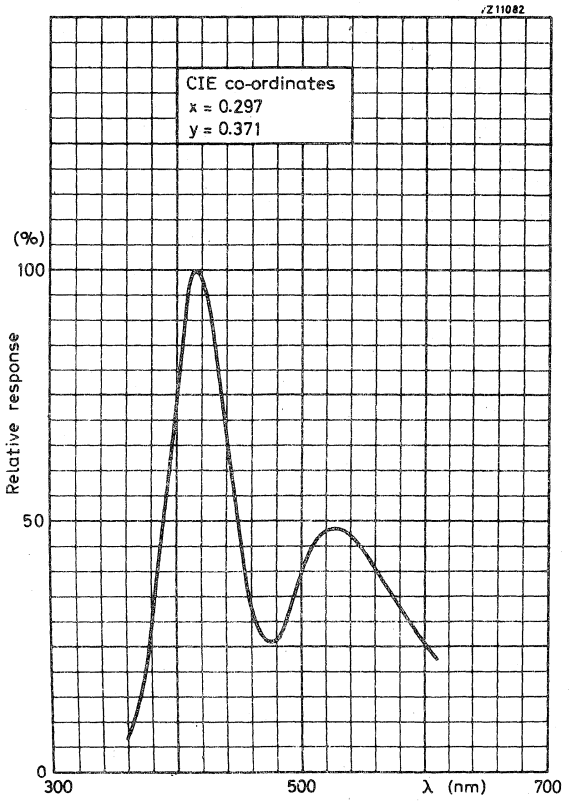
ZZ11082
CIE co-ordinates
x = 0.297
y = 0.371
(%)
100
50
0
Relative response
300
500
λ (nm)
700

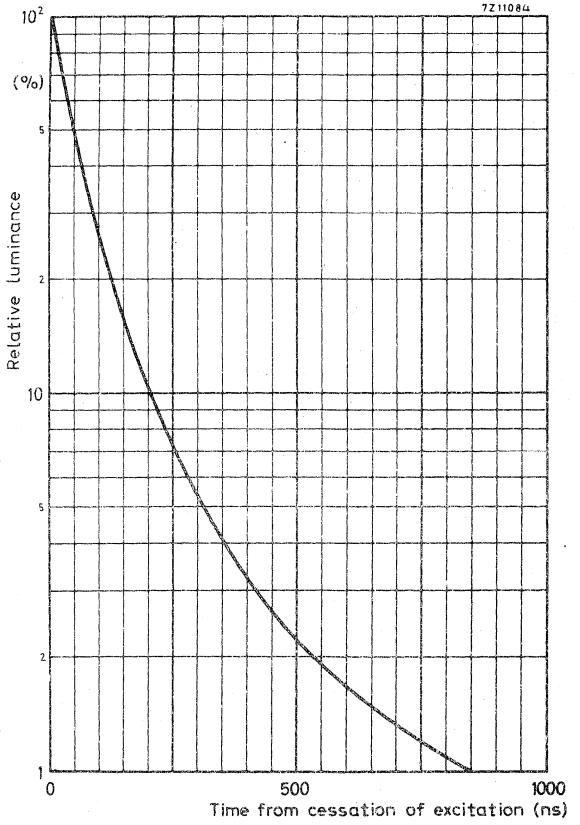
7Z11084
10^2
(%)
5
2
10
5
2
1
Relative luminance
0
500
1000
Time from cessation of excitation (ns)

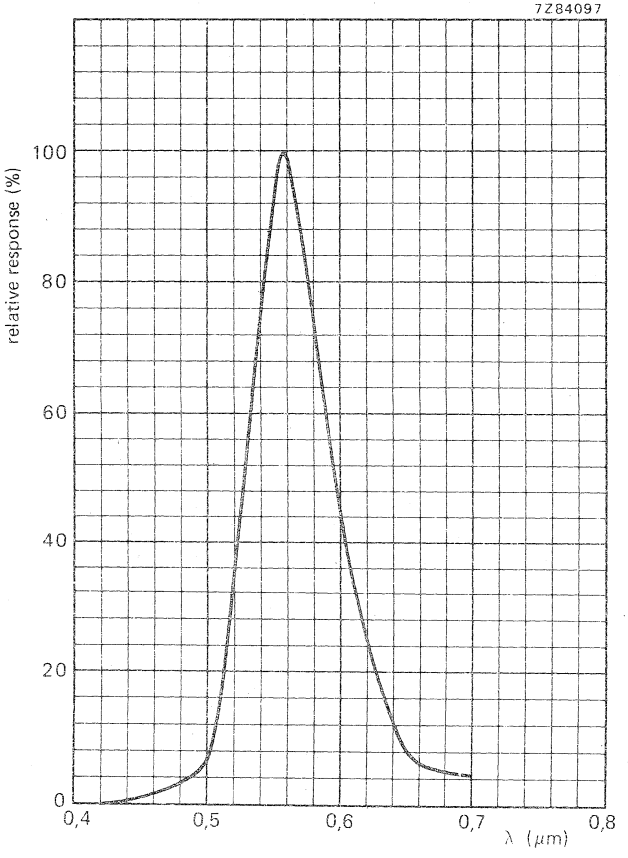
7Z84097
relative response (%)
100
80
60
40
20
0
0,4
0,5
0,6
0,7
0,8
λ (μm)

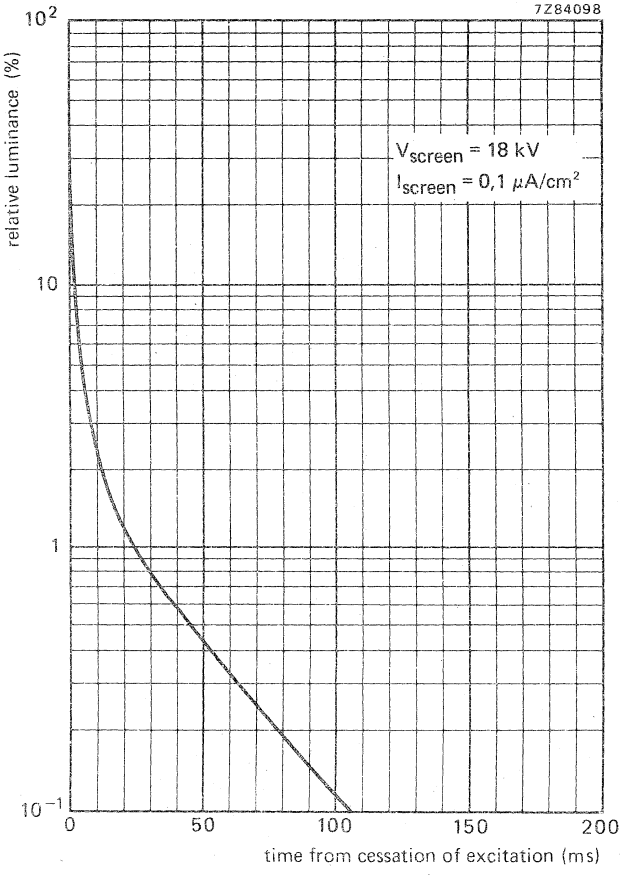
7Z84098
relative luminance (%)
10²
10
1
10⁻¹
V screen = 18 kV
I screen = 0,1 μA/cm²
0
50
100
150
200
time from cessation of excitation (ms)

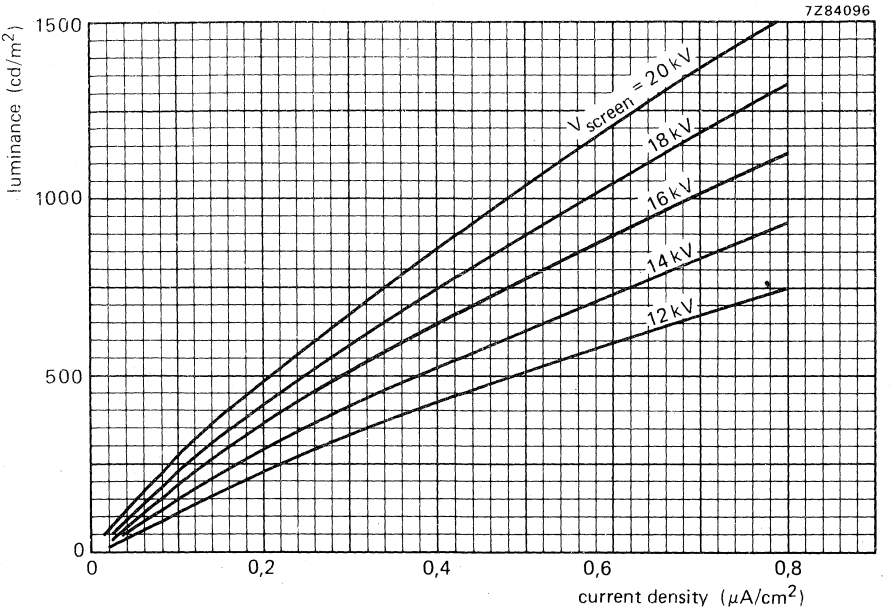
7Z84096
luminance (cd/m²)
1500
1000
500
0
0
0,2
0,4
0,6
0,8
current density (μA/cm²)
V screen = 20 kV
18 kV
16 kV
14 kV
12 kV

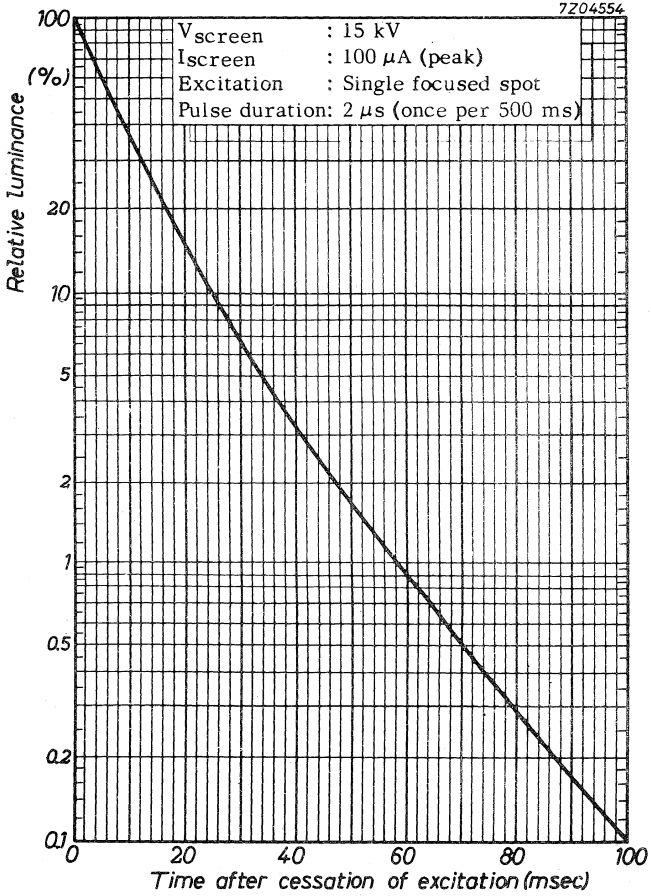
7Z04554
V_{screen} : 15 kV
I_{screen} : 100 μA (peak)
Excitation : Single focused spot
Pulse duration: 2 μs (once per 500 ms)
Relative luminance
(%)
100
20
10
5
2
1
0.5
0.2
0.1
0
20
40
60
80
100
Time after cessation of excitation (msec)

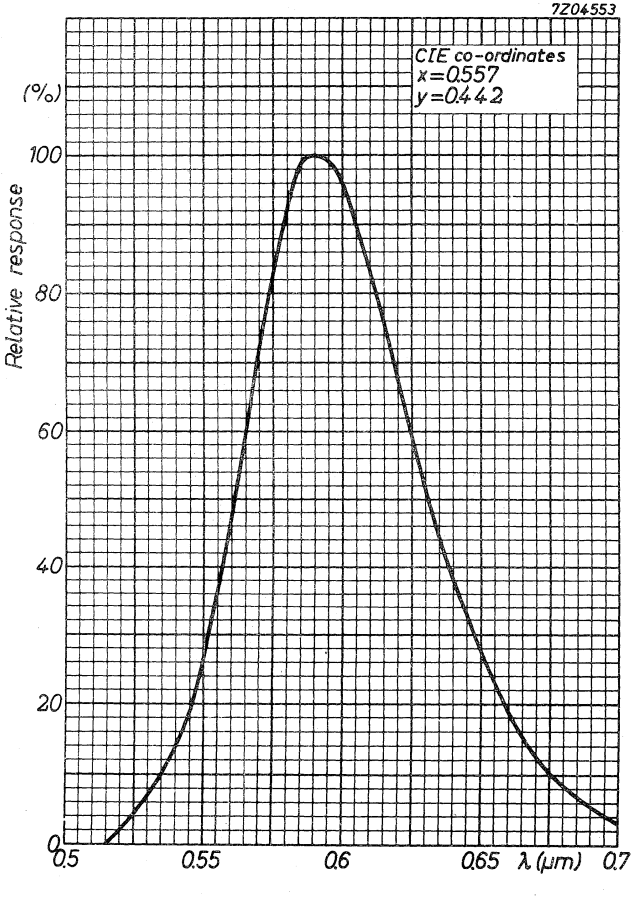
7Z04553
CIE co-ordinates
x=0.557
y=0.442
Relative response
(%)
100
80
60
40
20
0
0.5
0.55
0.6
0.65
λ (μm)
0.7

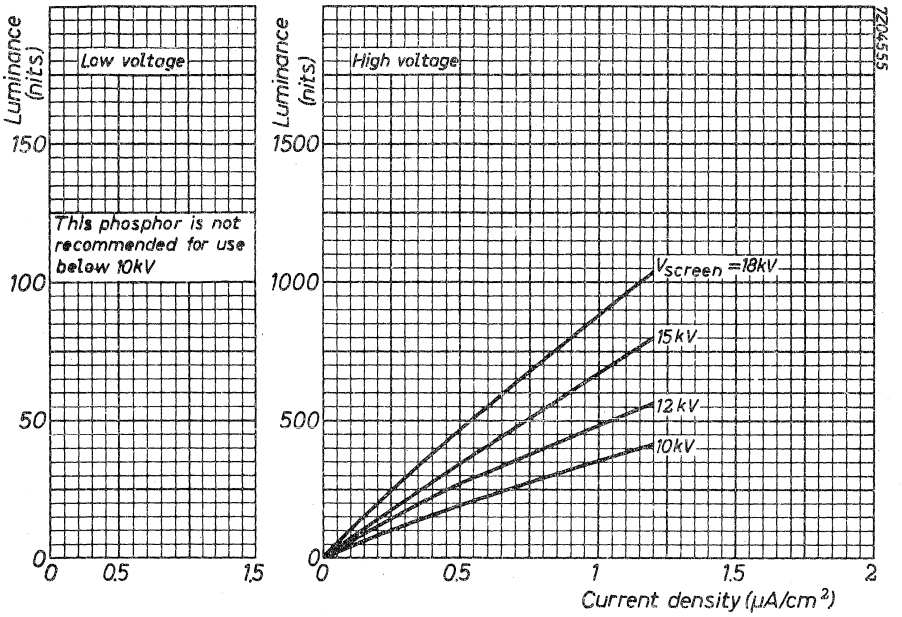
Luminance (nits)
Low voltage
This phosphor is not recommended for use below 10kV
150
100
50
0
0
0.5
1.5
Luminance (nits)
High voltage
1500
1000
500
0
0
0.5
1
1.5
2
V_{screen} = 18kV
15kV
12kV
10kV
Current density (μA/cm²)
7204555

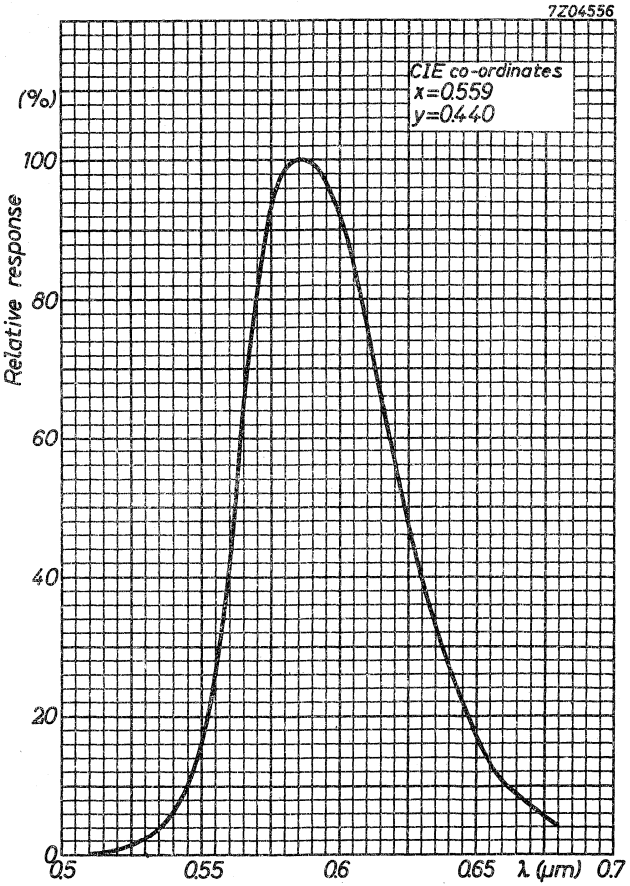
7Z04556
CIE co-ordinates
x=0.559
y=0.440
(%)
100
80
60
40
20
0
Relative response
0.5
0.55
0.6
0.65
λ (μm)
0.7

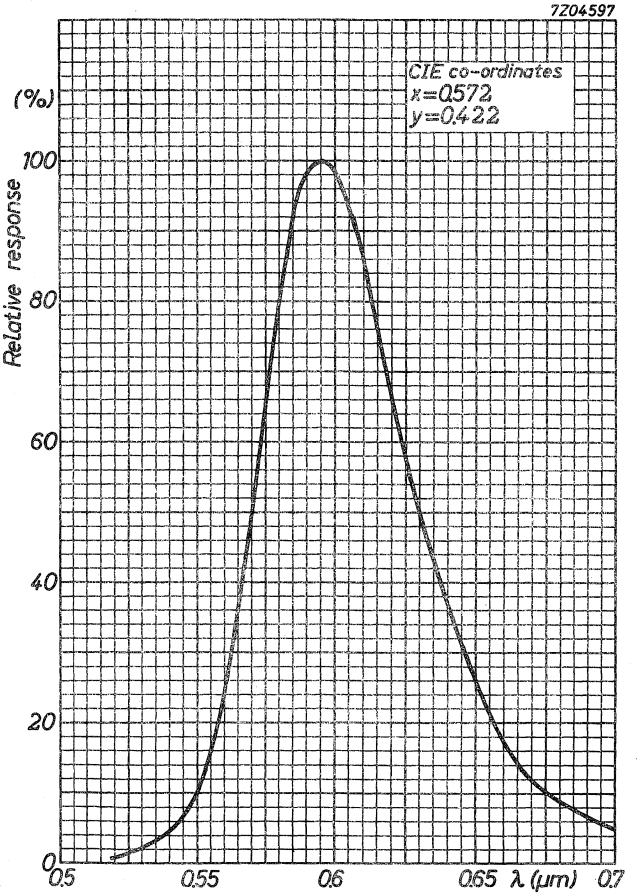
7Z04597
CIE co-ordinates
x=0.572
y=0.422
(%)
Relative response
100
80
60
40
20
0
0.5
0.55
0.6
0.65
λ (μm)
0.7

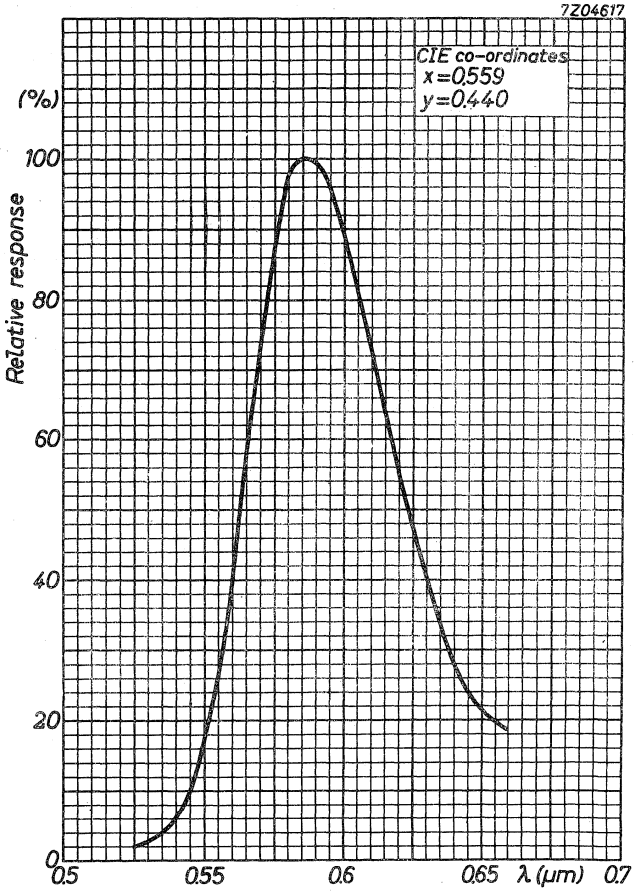
7Z04617
CIE co-ordinates
x=0,559
y=0,440
(%)
100
80
60
40
20
0
Relative response
0.5
0.55
0.6
0.65
λ (μm)
0.7

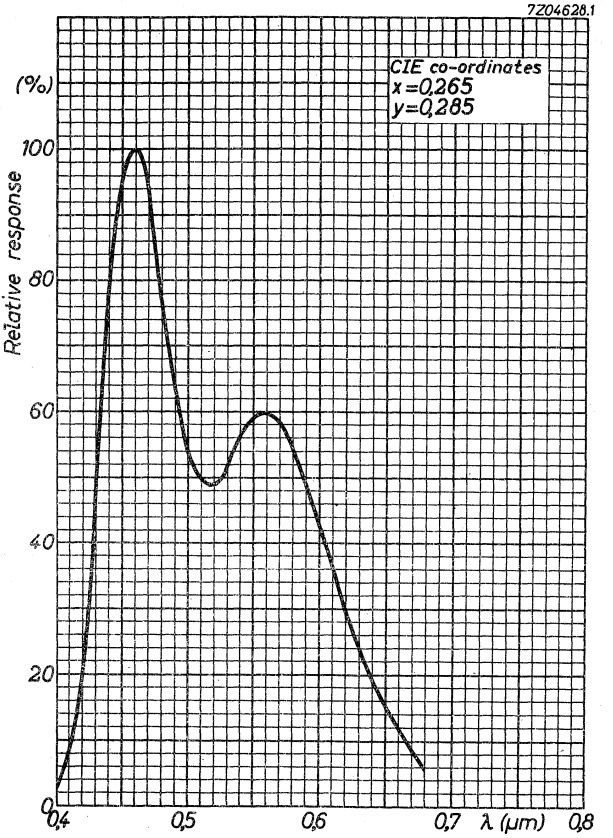
7Z04628.1
CIE co-ordinates
x=0,265
y=0,285
(%)
Relative response
100
80
60
40
20
0
0,4
0,5
0,6
0,7
λ (μm)
0,8

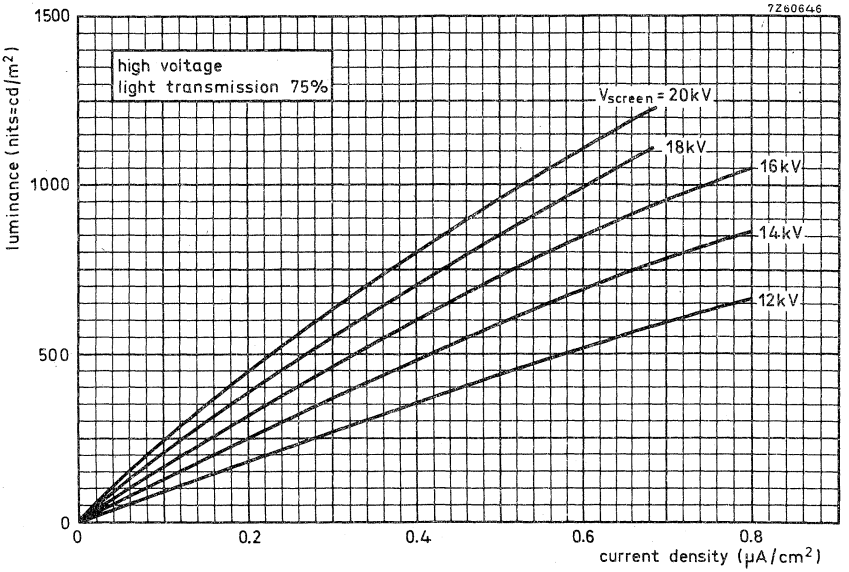
7Z60646
high voltage
light transmission 75%
V_{screen} = 20kV
18kV
16kV
14kV
12kV
luminance (nits=cd/m²)
1500
1000
500
0
0
0.2
0.4
0.6
0.8
current density (μA/cm²)

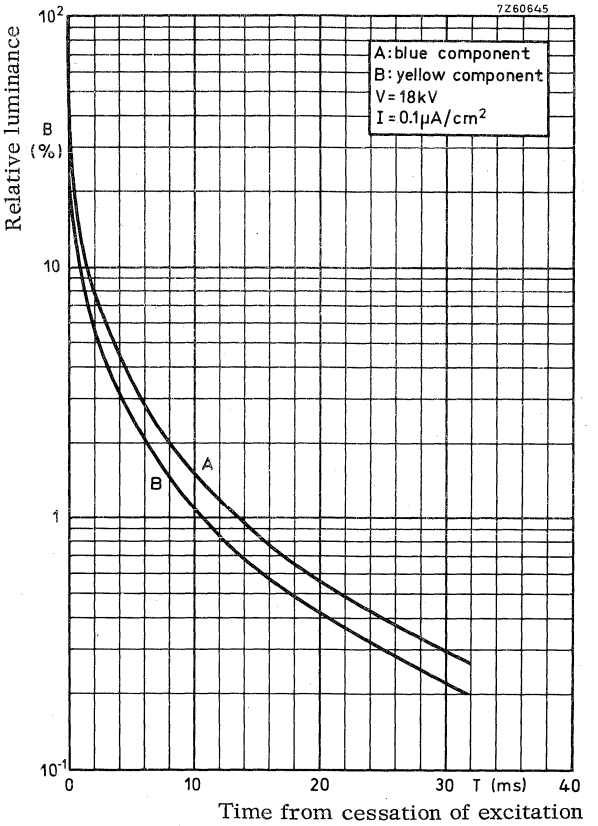
7Z60645
A: blue component
B: yellow component
V = 18kV
I = 0.1μA/cm²
Relative luminance
B (%)
10²
10
1
10⁻¹
0
10
20
30
T (ms)
40
A
B
Time from cessation of excitation

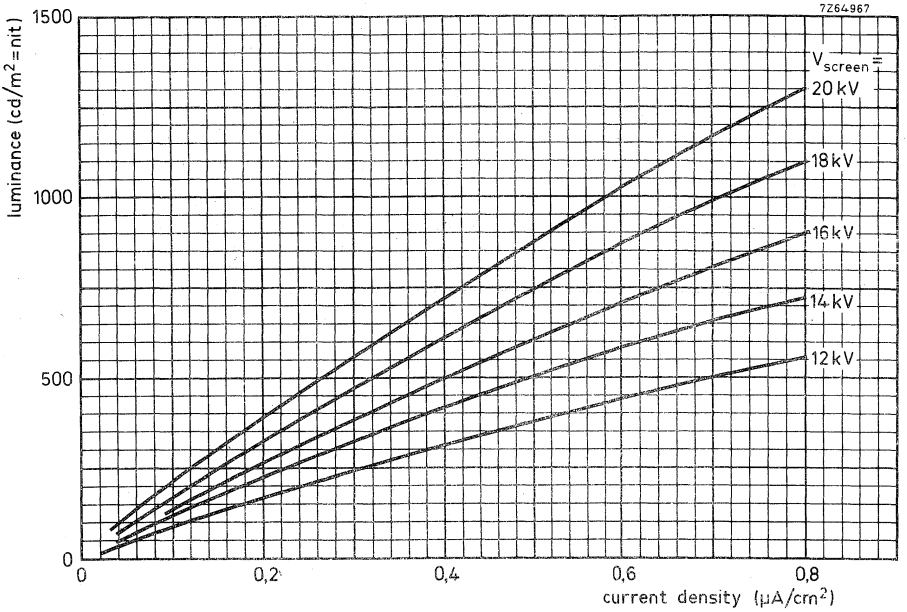
7Z64967
luminance (cd/m² = nit)
1500
1000
500
0
0
0,2
0,4
0,6
0,8
current density (μA/cm²)
V screen =
20 kV
18 kV
16 kV
14 kV
12 kV

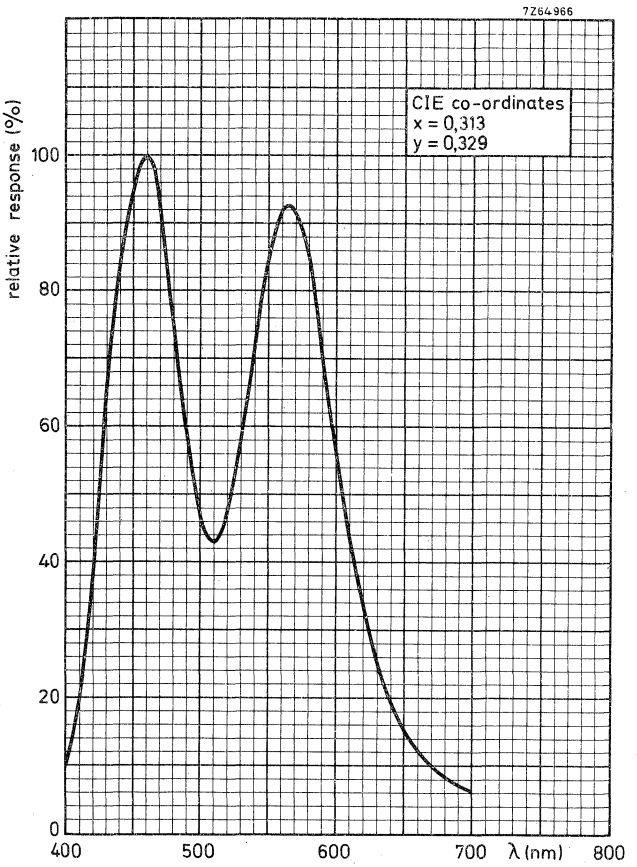
7Z64966
CIE co-ordinates
x = 0,313
y = 0,329
relative response (%)
100
80
60
40
20
0
400
500
600
700
λ (nm)
800

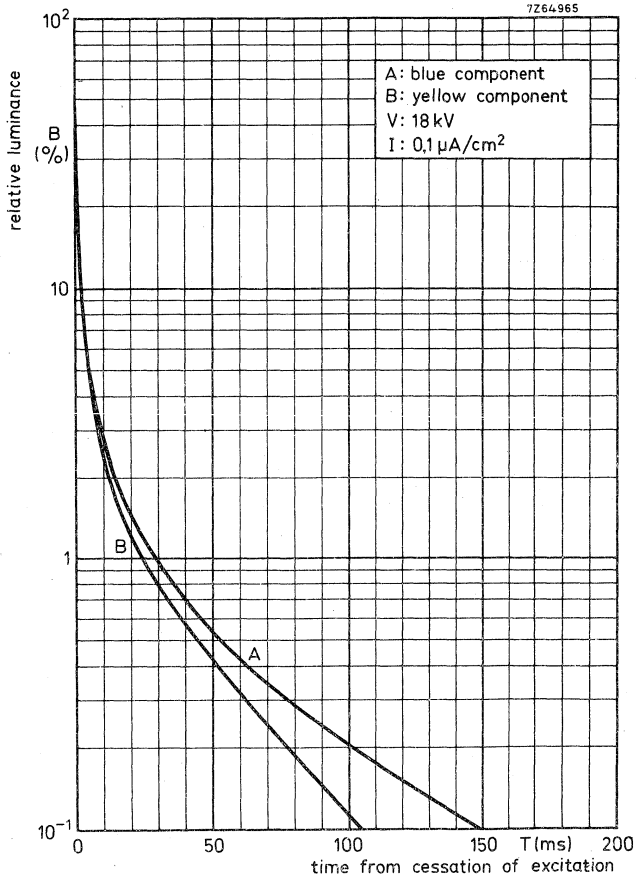
7Z64965
A: blue component
B: yellow component
V: 18 kV
I: 0,1 µA/cm²
relative luminance
B (%)
10²
10
1
10⁻¹
0
50
100
150
T (ms)
200
time from cessation of excitation
A
B

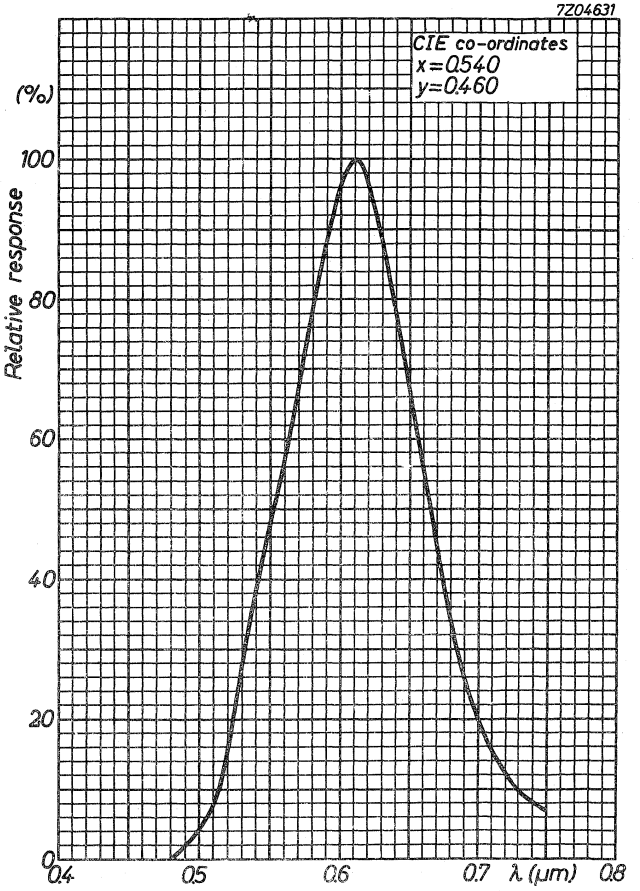
7Z04631
CIE co-ordinates
x=0.540
y=0.460
(%)
Relative response
100
80
60
40
20
0
0.4
0.5
0.6
0.7
λ (μm)
0.8

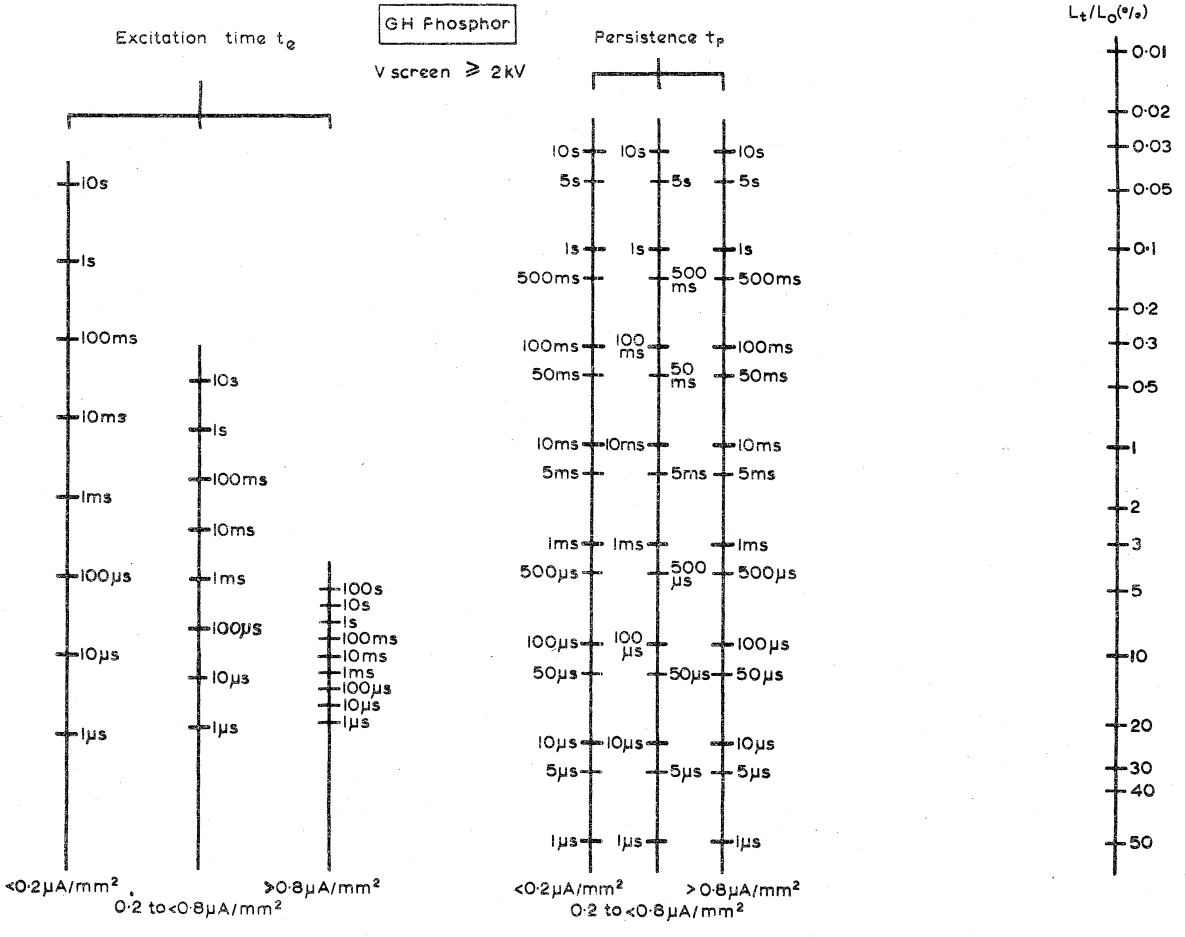
GH Phosphor
V screen ≥ 2kV
Excitation time t_e
10s
1s
100ms
10ms
1ms
100µs
10µs
1µs
<0·2µA/mm²
0·2 to<0·8µA/mm²
>0·8µA/mm²
Persistence t_p
10s
5s
1s
500ms
100ms
50ms
10ms
5ms
1ms
500µs
100µs
50µs
10µs
5µs
1µs
L_t/L_o(%)
0·01
0·02
0·03
0·05
0·1
0·2
0·3
0·5
1
2
3
5
10
20
30
40
50

INSTRUMENT TUBES

INSTRUMENT TUBES

PREFERRED TYPES

(Recommended types for new design)

Monoaccelerator tubes	D7–190..	D7–191..
	D7–220GH	D7–221GH
	D10–160..	D10–161..
	D13–480..	D13–481..
	D14–250GH	D14–251GH
Post-deflection accelerator tubes	D14–120GH	
	D14–121GH	
	D14–162GH/09	
	D14–260GH	
	D14–290GH	
	D14–300GH/93*	
	E14–100GH	
Large bandwidth instrument tubes	D14–240GH/37	
Direct-view storage tube	L14–111GH/55	
	L14–131GH/55	

* Data in preparation.

INSTRUMENT CATHODE-RAY TUBE

7 cm diameter flat faced monoaccelerator oscilloscope tube primarily intended for use in inexpensive oscilloscopes and monitoring devices.

QUICK REFERENCE DATA			
Accelerator voltage	$V_{g2,g4,g5,\ell}$	1000	V
Display area		60 x 50	mm^2
Deflection coefficient, horizontal	M_x	29	V/cm
vertical	M_y	11.5	V/cm

SCREEN

	colour	persistence
D7-190GH D7-190GM	green yellowish green	medium short long

Useful screen diameter	min.	64	mm
Useful scan			
horizontal	min.	60	mm
vertical	min.	50	mm

The useful scan may be shifted vertically to a maximum of 4mm with respect to the geometric centre of the faceplate.

HEATING: Indirect by A.C. or D.C.; parallel supply

Heater voltage	V_f	6.3	V
Heater current	I_f	300	mA

MECHANICAL DATA (Dimensions in mm)

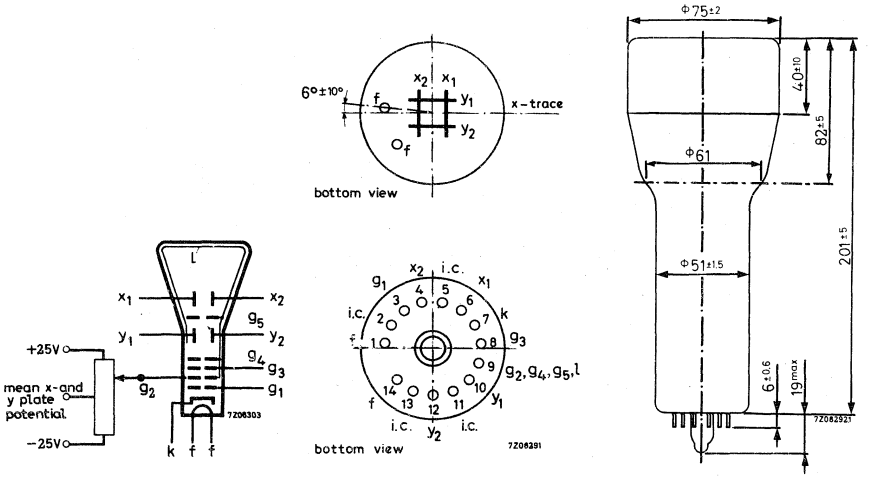

Mounting position: any

The tube should not be supported by the base alone and under no circumstances should the socket be allowed to support the tube.

Dimensions and connections

See also outline drawing

Overall length	max.	225	mm
Face diameter	max.	77	mm

Base 14 pin all glass

Net weight	approx.	260	g

Accessories

Socket (supplied with tube)	type	55566
Mu-metal shield	type	55534

CAPACITANCES

x_1 to all other elements except x_2	$C_{x1(x2)}$	4	pF
x_2 to all other elements except x_1	$C_{x2(x1)}$	4	pF
y_1 to all other elements except y_2	$C_{y1(y2)}$	3.5	pF
y_2 to all other elements except y_1	$C_{y2(y1)}$	3	pF
x_1 to x_2	C_{x1x2}	1.6	pF
y_1 to y_2	C_{y1y2}	1.1	pF
Control grid to all other elements	C_{g1}	5.5	pF
Cathode to all other elements	C_k	4.0	pF

FOCUSING electrostatic

DEFLECTION 3) double electrostatic

x plates symmetrical

y plates symmetrical

If use is made of the full deflection capabilities of the tube the deflection plates will intercept part of the electron beam, hence a low impedance deflection plate drive is desirable.

Angle between x and y traces 90 ± 1°

LINE WIDTH 3)

Measured with the shrinking raster method in the centre of the screen under typical operating conditions, adjusted for optimum spot size at a beam current I_ℓ = 10 μA.1)

Line width	l.w.	0.28	mm

---

1) As the construction of this tube does not permit a direct measurement of the beam current, this current should be determined as follows:
a) under typical operating conditions, apply a small raster display (no overscan), adjust V_{g1} for a beam current of approx. 10 μA and adjust V_{g3} and $V_{g2,g4,g5,\ell}$ for optimum spot quality at the centre of the screen.
b) under these conditions, but no raster, the deflection plate voltages should be changed to
$V_{y1} = V_{y2}$ = 1000 V; V_{x1} = 300 V; V_{x2} = 700 V, thus directing the total beam current to x2.
Measure the current on x_2 and adjust V_{g1} for I_{x2} = 10 μA (being the beam current I_ℓ)
c) set again for the conditions under a), without touching the V_{g1} control. Now a raster display with a true 10 μA screen current is achieved.
d) focus optimally in the centre of the screen (do not adjust the astigmatism control) and measure the line width.

3) See page 4

TYPICAL OPERATING CONDITIONS 3)

Accelerator voltage	$V_{g2,g4,g5,\ell}$	1000	V
Astigmatism control voltage	$\Delta V_{g2,g4,g5,\ell}$	± 25	V 1)
Focusing electrode voltage	V_{g3}	100 to 180	V
Control grid voltage for visual extinction of focused spot	V_{g1}	max. -35	V
Grid drive for 10 μA screen current		approx. 10	V
Deflection coefficient, horizontal	M_x	29	V/cm
		max. 31	V/cm
vertical	M_y	11.5	V/cm
		max. 12.5	V/cm
Deviation of linearity of deflection		max. 1	% 2)
Geometry distortion		see note 4	
Useful scan, horizontal		min. 60	mm
vertical		min. 50	mm

LIMITING VALUES (Absolute max. rating system)

Accelerator voltage	$V_{g2,g4,g5,\ell}$	max. 2200	V
		min. 900	V
Focusing electrode voltage	V_{g3}	max. 2200	V
Control grid voltage, negative	$-V_{g1}$	max. 200	V
		min. 0	V
Cathode to heater voltage	V_{kf}	max. 125	V
	$-V_{kf}$	max. 125	V
Grid drive, average		max. 20	V
Screen dissipation	W_ℓ	max. 3	mW/cm^2

1) All that will be necessary when putting the tube into operation is to adjust the astigmatism control voltage once for optimum spot shape in the screen centre. The control voltage will always be in the range stated, provided the mean x plate and certainly the mean y plate potential was made equal to $V_{g2,g4,g5,\ell}$ with zero astigmatism correction.

2) The sensitivity at a deflection of less than 75% of the useful scan will not differ from the sensitivity at a deflection of 25% of the useful scan by more than the indicated value.

3) The mean x and certainly the mean y plate potential should be equal to $V_{g2,g4,g5,\ell}$ with astigmatism adjustment set to zero.

4) A graticule, consisting of concentric rectangles of 40 mm x 50 mm and 39.2 mm x 49 mm is aligned with the electrical x-axis of the tube. The edges of a raster will fall between these rectangles.

INSTRUMENT CATHODE-RAY TUBE

7 cm diameter flat faced monoaccelerator oscilloscope tube with low heater consumption.

QUICK REFERENCE DATA

Accelerator voltage	$V_{g2, g4, g5 (\ell)}$	1000	V
Display area		60 x 50	mm^2
Deflection coefficient			
horizontal	M_x	29	V/cm
vertical	M_y	11,5	V/cm

The D7–191 is equivalent to the type D7–190.. except for the following.

HEATING

Indirect by a.c. or d.c.; parallel supply.

Heater voltage	V_f	6,3	V
Heater current	I_f	95	mA

LIMITING VALUES (Absolute maximum rating system)

Cathode to heater voltage				
positive	$V_{k/f}$	max.	100	V
negative	$-V_{k/f}$	max.	15	V

CAPACITANCES

Cathode to all other elements	C_k	2,3	pF

INSTRUMENT CATHODE-RAY TUBE

7 cm diagonal, rectangular flat faced monoaccelerator oscilloscope tube primarily intended for use in inexpensive oscilloscopes and monitoring devices.

QUICK REFERENCE DATA

Accelerator voltage	$V_{g2, g4, g5(\ell)}$	1000 V
Display area		60 x 36 mm^2
Deflection coefficient		
horizontal	M_x	12,5 V/cm
vertical	M_y	20 V/cm

SCREEN

	colour	persistence
D7–220GH	green	medium short

Useful screen dimensions	⩾	60 x 36 mm
Useful scan		
horizontal	⩾	60 mm
vertical	⩾	36 mm
Spot eccentricity in horizontal and vertical directions	<	5 mm

HEATING

Indirect by a.c. or d.c.; parallel supply

Heater voltage	V_f	6,3 V
Heater current	I_f	300 mA

MECHANICAL DATA

Mounting position: any

The tube should not be supported by the base alone and under no circumstances should the socket be allowed to support the tube.

Net mass approx. 350 g

Base 12-pin all glass; JEDEC B12–246

Dimensions and connections

See also outline drawing

Overall length	⩽	225 mm
Face dimensions	⩽	72,5 x 49 mm

Accessories

Socket, supplied with tube	type 55589
Mu-metal shield	type 55535

FOCUSING	electrostatic
DEFLECTION	double electrostatic
x-plates	symmetrical
y-plates	symmetrical
Angle between x and y-traces	90 ± 1°
→ Angle between x-trace and horizontal axis of the face	⩽ 3° *

If use is made of the full deflection capabilities of the tube the deflection plates will block part of the electron beam, hence a low impedance deflection plate drive is desirable.

→ **CAPACITANCES**

x_1 to all other elements except x_2	$C_{x1(x2)}$	4,0 pF
x_2 to all other elements except x_1	$C_{x2(x1)}$	4,1 pF
y_1 to all other elements except y_2	$C_{y1(y2)}$	4,2 pF
y_2 to all other elements except y_1	$C_{y2(y1)}$	5,4 pF
x_1 to x_2	C_{x1x2}	1,6 pF
y_1 to y_2	C_{y1y2}	1,8 pF
Control grid to all other elements	C_{g1}	7,0 pF
Cathode to all other elements	C_k	5,0 pF

* The tube is provided with a rotation coil, concentrically wound around the tube neck, enabling the alignment of the x-trace with the mechanical x-axis of the screen. The coil has 1000 turns and a maximum resistance of 250 Ω. Under typical operating conditions, a maximum of 10 ampere-turns are required for the maximum rotation of 3°. This means the required current is 10 mA maximum at a required voltage of 2,5 V maximum.

DIMENSIONS AND CONNECTIONS

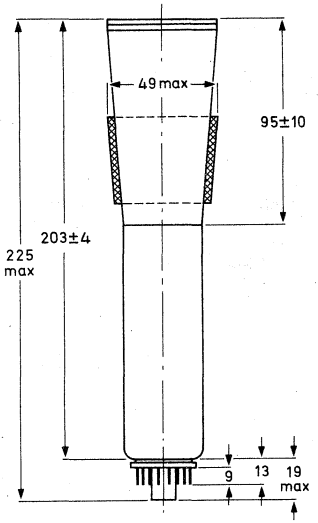

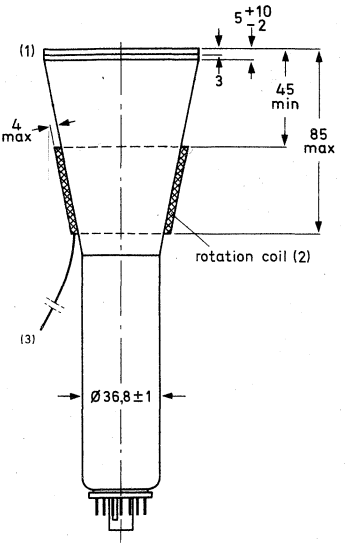

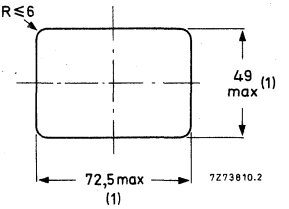

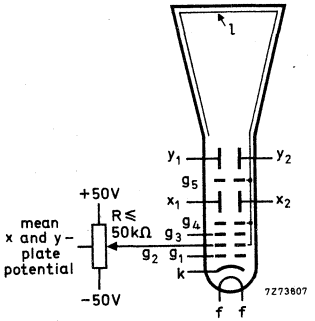

(1) The bulge at the frit seal does not exceed the maximum dimensions.
(2) The coil is fixed to the envelope by means of adhesive tape.
(3) The length of the connecting leads of the rotation coil is min. 350 mm.

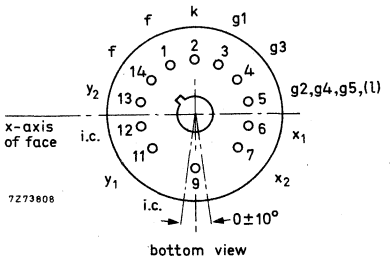

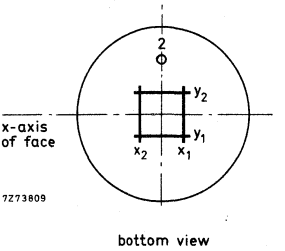

TYPICAL OPERATION

Conditions (note 1)

Accelerator voltage	$V_{g2,\ g4,\ g5(\ell)}$		1000	V	
Astigmatism control voltage	$\Delta V_{g2,\ g4,\ g5(\ell)}$		±50	V	(note 2)
→ Focusing electrode voltage	V_{g3}		100 to 180	V	
Control grid voltage for visual extinction of focused spot	V_{g1}	⩽	−35	V	

Performance

Useful scan					
horizontal		>	60	mm	
vertical		>	36	mm	
Deflection coefficient					
horizontal	M_x		12,5	V/cm	
		<	13,8	V/cm	
vertical	M_y		20	V/cm	
		<	22	V/cm	
Line width	l.w.		0,28	mm	(note 3)
Deviation of linearity of deflection		<	2	%	(note 4)
Grid drive for 10 μA screen current		≈	10	V	
Geometry distortion	see note 5				

LIMITING VALUES (Absolute maximum rating system)

Accelerator voltage	$V_{g2,\ g4,\ g5(\ell)}$	max.	2200	V	
		min.	900	V	
Focusing electrode voltage	V_{g3}	max.	2200	V	
Control grid voltage	$-V_{g1}$	max.	200	V	
		min.	0	V	
Cathode to heater voltage					
positive	V_{kf}	max.	125	V	
negative	$-V_{kf}$	max.	125	V	
Grid drive, average		max.	20	V	
Screen dissipation	W_ℓ	max.	3	mW/cm^2	

NOTES

1. The mean x-plate potential and the mean y-plate potential should be equal to $V_{g2, g4, g5(\ell)}$ (with astigmatism control voltage set to zero).
2. When putting the tube into operation the astigmatism control voltage should be adjusted only once for optimum spot size in the centre of the screen. The control voltage will be within the stated range, provided the conditions of note 1 are adhered to.
3. Measured with the shrinking raster method in the centre of the screen under typical operating conditions, adjusted for optimum spot size at a beam current $I_\ell = 10\ \mu A$.

   As the construction of the tube does not permit a direct measurement of the beam current, this current should be determined as follows.
   a) Under typical operating conditions, apply a small raster display (no overscan), adjust V_{g1} for a beam current of approx. 10 μA and adjust V_{g3} and $V_{g2, g4, g5(\ell)}$ for optimum spot quality at the centre of the screen.
   b) Under these conditions, but without raster, the deflection plate voltages should be changed to: $V_{x1} = V_{x2} = 1000$ V; $V_{y1} = 300$ V; $V_{y2} = 700$ V, thus directing the total beam current to y_2. Measure the current on y_2 and adjust V_{g1} for $I_{y2} = 10\ \mu A$.
   c) Set again for the conditions under a), without touching the V_{g1} control. The screen current of the resulting raster display is now 10 μA.
   d) Focus optimally in the centre of the screen (do not adjust the astigmatism control) and measure the line width.
4. The sensitivity at a deflection of less than 75% of the useful scan will not differ from the sensitivity at a deflection of 25% of the useful scan by more than the indicated value.
5. A graticule, consisting of concentric rectangles of 57,0 mm x 33,0 mm and 56 mm x 31,6 mm is aligned with the electrical x-axis of the tube. The edges of a raster will fall between these rectangles.

INSTRUMENT CATHODE-RAY TUBE

7 cm diagonal, rectangular flat faced monoaccelerator oscilloscope tube primarily intended for use in inexpensive oscilloscopes and monitoring devices. This tube features a low heater power consumption.

QUICK REFERENCE DATA

Accelerator voltage	$V_{g2, g4, g5(\ell)}$	1000	V
Display area		60 x 36	mm^2
Deflection coefficient			
horizontal	M_x	12,5	V/cm
vertical	M_y	20	V/cm

The D7–221GH is equivalent to the type D7–220GH except for the following.

HEATING

Indirect by a.c. or d.c.; parallel supply

Heater voltage	V_f	6,3	V
Heater current	I_f	95	mA

LIMITING VALUES (Absolute maximum rating system)

Cathode to heater voltage				
positive	V_{kf}	max.	100	V
negative	$-V_{kf}$	max.	15	V
Control grid circuit resistance	R_{g1}	max.	1	MΩ

CAPACITANCES

Cathode to all other elements	C_k	3,7	pF

INSTRUMENT CATHODE-RAY TUBE

10 cm diameter flat faced monoaccelerator oscilloscope tube primarily intended for use in inexpensive oscilloscopes and read-out devices.

QUICK REFERENCE DATA			
Accelerator voltage	$V_{g_2,g_4,g_5(\ell)}$	1500	V
Display area		80 x 60	mm^2
Deflection coefficient, horizontal	M_x	32	V/cm
vertical	M_y	13.7	V/cm

SCREEN

	colour	persistence
D10-160GH	green	medium short
D10-160GM	yellowish green	long

Useful screen diameter min. 85 mm

Useful scan

horizontal min. 80 mm

vertical min. 60 mm

The useful scan may be shifted vertically to a max. of 5 mm with respect to the geometric centre of the faceplate.

HEATING: Indirect by A.C. or D.C.; parallel supply

Heater voltage	V_f	6.3	V
Heater current	I_f	300	mA

MECHANICAL DATA (Dimensions in mm)

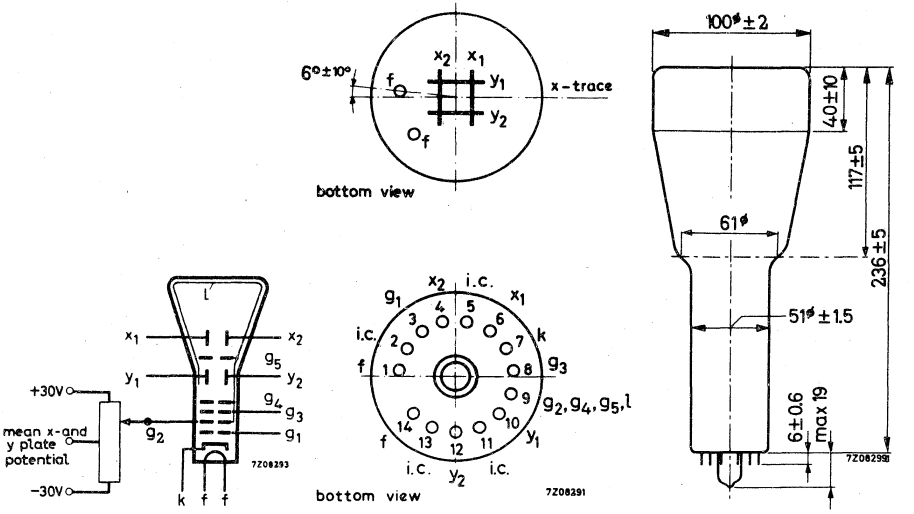

Mounting position: any

The tube should not be supported by the base alone and under no circumstances should the socket be allowed to support the tube.

Dimensions and connections

See also outline drawing

Overall length	max.	260	mm
Face diameter	max.	102	mm

Base 14 pin all glass

Net weight approx. 400 g

Accessories

Socket (supplied with tube)	type	55566
Mu metal shield	type	55547

CAPACITANCES

x_1 to all other elements except x_2	$C_{x1(x2)}$	4	pF
x_2 to all other elements except x_1	$C_{x2(x1)}$	4	pF
y_1 to all other elements except y_2	$C_{y1(y2)}$	3.5	pF
y_2 to all other elements except y_1	$C_{y2(y1)}$	3	pF
x_1 to x_2	C_{x1x2}	1.6	pF
y_1 to y_2	C_{y1y2}	1.1	pF
Control grid to all other elements	C_{g1}	5.5	pF
Cathode to all other elements	C_k	4	pF

FOCUSING electrostatic

DEFLECTION 3) double electrostatic

x plates symmetrical

y plates symmetrical

If use is made of the full deflection capabilities of the tube the deflection plates will intercept part of the electron beam, hence a low impedance deflection plate drive is desirable.

Angle between x and y traces 90 ± 1°

LINE WIDTH

Measured with the shrinking raster method in the centre of the screen under typical operating conditions, adjusted for optimum spot size at a beam current $I_\ell = 10\ \mu A$. 1)

Line width l.w. 0.27 mm

1) As the construction of this tube does not permit a direct measurement of the beam current, this current should be determined as follows:
a) under typical operating conditions, apply a small raster display (no overscan), adjust V_{g1} for a beam current of approx. 10 μA and adjust V_{g3} and $V_{g2,g4,g5,\ell}$ for optimum spot quality at the centre of the screen.
b) under these conditions, but no raster, the deflection plate voltages should be changed to
$V_{y1} = V_{y2} = 1500$ V; $V_{x1} = 800$ V; $V_{x2} = 1200$ V, thus directing the total beam current to x2.
Measure the current on x_2 and adjust V_{g1} for $I_{x2} = 10\ \mu A$ (being the beam current I_ℓ)
c) set again for the conditions under a), without touching the V_{g1} control. Now a raster display with a true 10 μA screen current is achieved.
d) focus optimally in the centre of the screen (do not adjust the astigmatism control) and measure the line width.

3) See page 4

TYPICAL OPERATING CONDITIONS[3])

Accelerator voltage	$V_{g2,g4,g5,\ell}$	1500	V
Astigmatism control voltage	$\Delta V_{g2,g4,g5,\ell}$	± 30	V [1])
Focusing electrode voltage	V_{g3}	140 to 275	V
Control grid voltage for visual extinction of focused spot	V_{g1}	max. −50	V
Grid drive for 10 μA screen current		approx. 10	V
Deflection coefficient, horizontal	M_x	32	V/cm
		max. 34	V/cm
vertical	M_y	13.7	V/cm
		max. 14.5	V/cm
Deviation of linearity of deflection		max. 1	% [2])
Geometry distortion		see note 4	
Useful scan, horizontal		min. 80	mm
vertical		min. 60	mm

LIMITING VALUES (Absolute max. rating system)

Accelerator voltage	$V_{g2,g4,g5,\ell}$	max. 2200	V
		min. 1350	V
Focusing electrode voltage	V_{g3}	max. 2200	V
Control grid voltage, negative	$-V_{g1}$	max. 200	V
		min. 0	V
Cathode to heater voltage	V_{kf}	max. 125	V
	$-V_{kf}$	max. 125	V
Grid drive, average		max. 20	V
Screen dissipation	W_ℓ	max. 3	mW/cm^2

1) All that will be necessary when putting the tube into operation is to adjust the astigmatismcontrol voltage once for optimum spot shape in the screen centre. The control voltage will always be in the range stated, provided the mean x plate and centainly the mean y plate potential was made equal to $V_{g_2,g_4,g_5,\ell}$ with zero astigmatism correction.

2) The sensitivity at a deflection of less than 75% of the useful scan will not differ from the sensitivity at a deflection of 25% of the useful scan by more than the indicated value.

3) The mean x and certainly the mean y plate potentials should be equal to $V_{g2,g4,g5,\ell}$ with astigmatism adjustment set to zero.

4) A graticule, consisting of concentric rectangles of 50 mm x 60 mm and 49 mm x 58.6 mm is aligned with the electrical x-axis of the tube. The edges of a raster will fall between these rectangles.

INSTRUMENT CATHODE-RAY TUBE

10 cm diameter flat faced monoaccelerator oscilloscope tube with low heater consumption.

QUICK REFERENCE DATA

Accelerator voltage	$V_{g2, g4, g5 (\ell)}$	1500	V
Display area		80 x 60	mm^2
Deflection coefficient			
horizontal	M_x	32	V/cm
vertical	M_y	13,7	V/cm

The D10—161.. is equivalent to the type D10—160.. except for the following.

HEATING

Indirect by a.c. or d.c.; parallel supply

Heater voltage	V_f	6,3	V
Heater current	I_f	95	mA

LIMITING VALUES (Absolute maximum rating system)

Cathode to heater voltage			
positive	V+k/f− max.	100	V
negative	V−k/f+ max.	15	V

CAPACITANCES

Cathode to all other elements	C_k	2,3	pF

INSTRUMENT CATHODE-RAY TUBE

10 cm diameter flat faced oscilloscope tube with mesh, designed for compact, transistorized oscilloscopes of 10 MHz to 30 MHz bandwidth.

QUICK REFERENCE DATA			
Final accelerator voltage	$V_{g7(\ell)}$	6	kV
Display area		80 x 60	mm^2
Deflection coefficient, horizontal	M_x	13	V/cm
vertical	M_y	3,5	V/cm

SCREEN

	colour	persistence
D10-170GH	green	medium short

Useful screen diameter	min.	85	mm
Useful scan at $V_{g7(\ell)}/V_{g2,\ g4} = 6$			
horizontal	min.	80	mm
vertical	min.	60	mm

The useful scan may be found shifted vertically to a max. of 5 mm with respect to the geometric centre of the faceplate.

HEATING: Indirect by a.c. or d.c.; parallel supply

Heater voltage	V_f	6,3	V
Heater current	I_f	300	mA

MECHANICAL DATA

Dimensions in mm

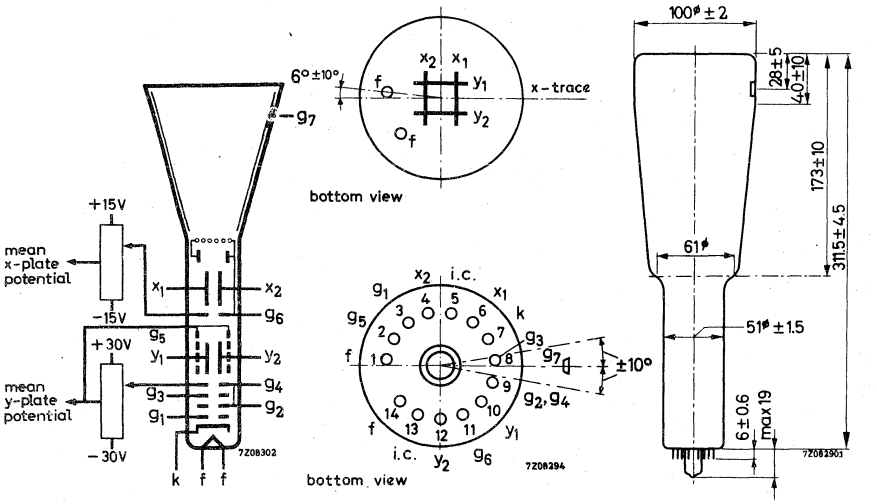

Mounting position: any

The tube should not be supported by the base alone and under no circumstances should the socket be allowed to support the tube.

Dimensions and connections

See also outline drawing

Overall length (socket included)	max.	335	mm
Face diameter	max.	102	mm
Net weight	approx.	500	g

Base 14 pin all glass

Accessories

Socket (supplied with tube)	type	55566
Final accelerator contact connector	type	55563A
Mu-metal shield	type	55548

CAPACITANCES

x_1 to all other elements except x_2	$C_{x_1(x_2)}$	7	pF
x_2 to all other elements except x_1	$C_{x_2(x_1)}$	7	pF
y_1 to all other elements except y_2	$C_{y_1(y_2)}$	5	pF
y_2 to all other elements except y_1	$C_{y_2(y_1)}$	5	pF
x_1 to x_2	$C_{x_1x_2}$	2.5	pF
y_1 to y_2	$C_{y_1y_2}$	1.5	pF
Control grid to all other elements	C_{g_1}	6	pF
Cathode to all other elements	C_k	5	pF

FOCUSING electrostatic

DEFLECTION double electrostatic

x plates symmetrical

y plates symmetrical

If use is made of the full deflection capabilities of the tube the deflection plates will intercept part of the electron beam; hence a low impedance deflection plate drive is desirable.

Angle between x and y traces 90 ± 1°

LINE WIDTH

Measured with the shrinking raster method over the whole screen area under typical operating conditions, adjusted for optimum spot size at a beam current I_ℓ = 10 μA.

Line width	l.w.	0.42	mm

TYPICAL OPERATING CONDITIONS

Final accelerator voltage	$V_{g_7(\ell)}$	6000	V
Interplate shield voltage	V_{g_6}	1000	V
Geometry control voltage	ΔV_{g_6}	± 15	V [1]
Deflection plate shield voltage	V_{g_5}	1000	V [2]
Focusing electrode voltage	V_{g_3}	170 to 230	V
First accelerator voltage	V_{g_2,g_4}	1000	V
Astigmatism control voltage	$\Delta V_{g_2,g_4}$	± 30	V [3]
Control grid voltage for visual extinction of focused spot	V_{g_1}	-16 to -40	V
Deflection coefficient, horizontal	M_x	av. 13 max. 14	V/cm
vertical	M_y	av. 3.5 max. 3.8	V/cm
Deviation of linearity of deflection		max. 2	% [4]
Geometry distortion		see note 5	
Useful scan, horizontal		min. 80	mm
vertical		min. 60	mm

LIMITING VALUES (Absolute maximum rating system)

Final accelerator voltage	$V_{g_7(\ell)}$	max. 6600 min. 4000	V V
Interplate shield voltage and geometry control electrode voltage	V_{g_6}	max. 2200	V
Deflection plate shield voltage	V_{g_5}	max. 2200	V
Focusing electrode voltage	V_{g_3}	max. 2200	V
First accelerator and astigmatism control electrode voltage	V_{g_2,g_4}	max. 2200 min. 900	V V
Control grid voltage, negative	$-V_{g_1}$	max. 200 min. 0	V V
Cathode to heater voltage	V_{kf} $-V_{kf}$	max. 125 max. 125	V V
Voltage between astigmatism control electrode and any deflection plate	$V_{g_4/x}$ $V_{g_4/y}$	max. 500 max. 500	V V
Grid drive, average		max. 20	V
Screen dissipation	W_ℓ	max. 3	mW/cm^2
Ratio $V_{g_7(\ell)}/V_{g_2,g_4}$	$V_{g_7(\ell)}/V_{g_2,g_4}$	max. 6	

For notes see page 5

Notes

1) This tube is designed for optimum performance when operating at a ratio $V_{g_7}/V_{g_2, g_4} = 6$.
The geometry electrode voltage should be adjusted within the indicated range (values with respect to the mean x-plate potential). A negative control voltage will cause some pincushion distortion and less background light, a positive control voltage will give some barrel distortion and a slight increase of background light.

2) The deflection plate shield voltage should be equal to the mean y-plate potential. The mean x- and y-plate potentials should be equal for optimum spot quality.

3) The astigmatism control electrode voltage should be adjusted for optimum spot shape. For any necessary adjustment its potential will be within the stated range.

4) The sensitivity at a deflection of less than 75% of the useful scan will not differ from the sensitivity at a deflection of 25% of the useful scan by more than the indicated value.

5) A graticule, consisting of concentric rectangles of 60 mm x 60 mm and 58.6 mm x 58.6 mm, is aligned with the electrical x-axis of the tube.
With optimum correction potentials applied the edges of a raster lie between these rectangles.

INSTRUMENT CATHODE-RAY TUBE

Oscilloscope tube with flat face, side connections to the deflector plates. The high sensitivities of this mesh tube render it suitable for transistorized equipment. The phosphor screen is metal backed.

QUICK REFERENCE DATA				
Final accelerator voltage	$V_{g9(\ell)}$		15	kV
Display area			6x10	cm
Deflection coefficient, horizontal	M_x		9.5	V/cm
vertical	M_y	=	2.9	V/cm

SCREEN

	Colour	Persistence
D13-26GH	green	medium short
D13-26GP	bluish green	medium short

Useful screen diameter	min.	114	mm
Useful scan at $V_{g9(\ell)}/V_{g4}$ = 10			
horizontal	min.	100	mm
vertical	min.	60	mm
Spot eccentricity in horizontal direction		± 8	mm
Spot eccentricity in vertical direction		± 6	mm

HEATING

Indirect by A.C. or D.C.; parallel supply

Heater voltage	V_f	= 6.3	V
Heater current	I_f	= 300	mA

MECHANICAL DATA

Dimensions in mm

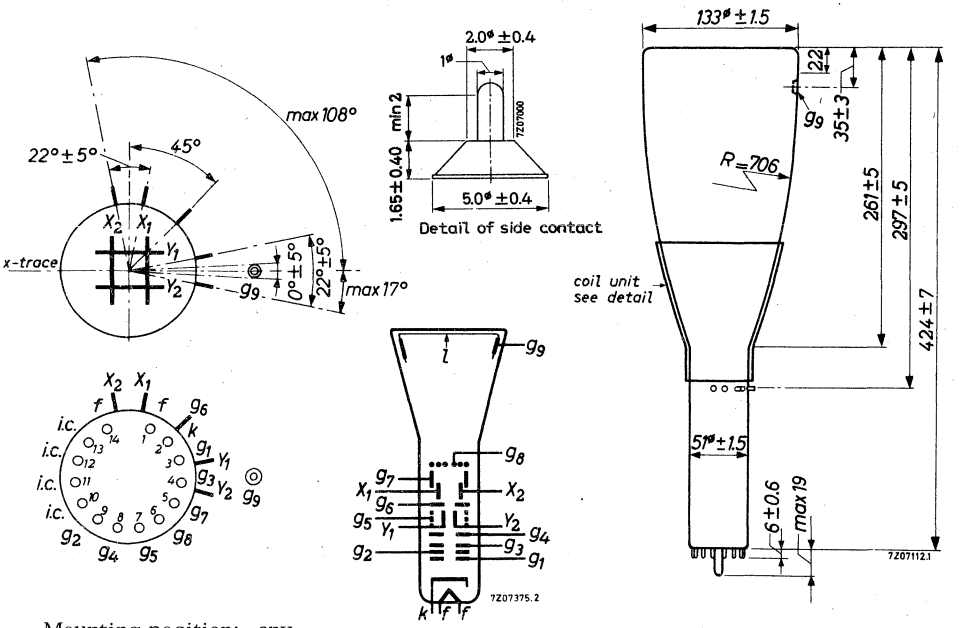

Mounting position: any

The tube should not be supported by the base alone and under no circumstances should the socket be allowed to support the tube.

Base	14 pin all-glass		
Dimensions and connections			
Overall length	max.	450	mm
Face diameter	max.	134.5	mm
Net weight	approx.	925	g
Accessories			
Socket	type	55566	
Final accelerator contact connector	type	55563A	
Side contact connector	type	55561	
Mu-metal shield	type	55555[1])	

[1]) See page 6.

CAPACITANCES

x_1 to all other elements except x_2	$C_{x_1(x_2)}$	=	4.5	pF
x_2 to all other elements except x_1	$C_{x_2(x_1)}$	=	4.5	pF
y_1 to all other elements except y_2	$C_{y_1(y_2)}$	=	3.8	pF
y_2 to all other elements except y_1	$C_{y_2(y_1)}$	=	3.8	pF
x_1 to x_2	$C_{x_1x_2}$	=	2.7	pF
y_1 to y_2	$C_{y_1y_2}$	=	1.8	pF
Control grid to all other elements	C_{g_1}	=	5.5	pF
Cathode to all other elements	C_k	=	3.0	pF

FOCUSING electrostatic

DEFLECTION double electrostatic

x plates symmetrical

y plates symmetrical

If use is made of the full deflection capabilities of the tube the deflection plates will intercept part of the electron beam; hence a low impedance deflection plate drive is desirable.

Angle between x and y traces 90° See "Correction coils"

LINE WIDTH

Measured with the shrinking raster method in the centre of the screen

Final accelerator voltage	$V_{g9(\ell)}$	=	15 000	15 000	V
Astigmatism control electrode voltage	V_{g_4}	=	2400	1500	V[4])
First accelerator voltage	V_{g_2}	=	2400	1500	V
Beam current	$I(\ell)$	=	10	10	μA
Line width	l.w.	=	0.3	0.4	mm

[4]) See page 6

TYPICAL OPERATING CONDITIONS

Final accelerator voltage	$V_{g9(\ell)}$	=	15 000	V
Post deflection shield voltage (with respect to V_{g7})	V_{g8}	=	−12 to −18	V
Geometry control electrode voltage	V_{g7}	=	1500 ±70	V [2]
Interplate shield voltage	V_{g6}	=	1500	V
Deflection plate shield voltage	V_{g5}	=	1500	V [3]
Astigmatism control electrode voltage	V_{g4}	=	1500 ±70	V [4]
Focusing electrode voltage	V_{g3}	=	375 to 625	V
First accelerator voltage	V_{g2}	=	1500	V
Control grid voltage for visual extinction of focused spot	$-V_{g1}$	=	40 to 90	V
Deflection coefficient				
horizontal	M_x	=	8 to 11	V/cm
vertical	M_y	=	2.3 to 3.5	V/cm
Deviation of linearity of deflection		=	max. 2	% [5]
Geometry distortion			See note 6	
Useful scan				
horizontal		=	min. 100	mm
vertical		=	min. 60	mm

CIRCUIT DESIGN VALUES

Focusing voltage	V_{g3}	=	250 to 417	V per kV of V_{g4}
Control grid voltage for visual extinction of focused spot	$-V_{g1}$	=	30 to 56.7	V per kV of V_{g2}
Deflection coefficient at $V_{g9(\ell)}/V_{g4}$ = 10				
horizontal	M_x	=	6.3 to 8.4	V/cm per kV of V_{g4}
vertical	M_y	=	1.53 to 2.33	V/cm per kV of V_{g4}
Control grid circuit resistance	R_{g1}	=	max. 1	MΩ
Deflection plate circuit resistance	R_x, R_y	=	max. 50	kΩ
Focusing electrode current at a beam current of max. 25 μA	I_{g3}	=	−25 to +25	μA [7]

2) 3) 4) 5) 6) 7) See page 6.

LIMITING VALUES (Absolute max. rating system)

Final accelerator voltage	$V_{g9(\ell)}$	=	max.	16500	V
		=	min.	9000	V
Post deflection shield voltage	V_{g8}	=	max.	2500	V
		=	min.	1350	V
Geometry control electrode voltage	V_{g7}	=	max.	2500	V
		=	min.	1350	V
Interplate shield voltage	V_{g6}	=	max.	2500	V
		=	min.	1350	V
Deflection plate shield voltage	V_{g5}	=	max.	2500	V
		=	min.	1350	V
Astigmatism control electrode voltage	V_{g4}	=	max.	2500	V
		=	min.	1350	V
Focusing electrode voltage	V_{g3}	=	max.	2500	V
First accelerator voltage	V_{g2}	=	max.	2500	V
		=	min.	1350	V
Control grid voltage					
negative	$-V_{g1}$	=	max.	200	V
positive	V_{g1}	=	max.	0	V
Voltage between astigmatism electrode and any deflection plate	$V_{g4/x}$	=	max.	500	V
	$V_{g4/y}$	=	max.	500	V
Cathode to heater voltage					
cathode positive	$V_{+k/f-}$	=	max.	200	V
cathode negative	$V_{-k/f+}$	=	max.	125	V
Screen dissipation	W_ℓ	=	max.	3	mW/cm^2
Ratio $V_{g9(\ell)}/V_{g4}$	$V_{g9(\ell)}/V_{g4}$	=	max.	10	
Cathode current, average	I_k	=	max.	300	μA

1) To avoid damaging the side contacts the narrower end of the mu-metal shield should have an internal diameter of not less than 70 mm.

2) This tube is designed for optimum performance when operating at the ratio $V_{g9(\ell)}/V_{g_4} = 10$. Operation at other ratio may result in changes in deflection uniformity and geometry distortion. The geometry control electrode voltage should be adjusted for optimum performance. For any necessary adjustment its potential will be within the stated range.

3) This voltage should be equal to the mean x- and y plates potential.

4) The astigmatism control electrode voltage should be adjusted for optimum spot shape. For any necessary adjustment its potential will be within the stated range.

5) The sensitivity at a deflection of less than 75% of the useful scan will not differ from the sensitivity at a deflection of 25% of the useful scan by more than the indicated value.

6) A graticule, consisting of concentric rectangles of 100 mm x 60 mm and 98 mm x 58.2 mm is aligned with the electrical x axis of the tube. The edges of a raster will fall between these rectangles with optimum correction potentials applied.

7) Values to be taken into account for the calculation of the focus potentiometer.

CORRECTION COILS

The D13-26.. is provided with a coil unit consisting of a pair of coils for:

a. Correction of the orthogonality of the x and y traces (which means that at the centre of the screen the angle between the x and y traces can be made exactly 90°).

b. Vertical shift of the scanned area.

DETAIL DRAWING OF COIL UNIT

Dimensions in mm

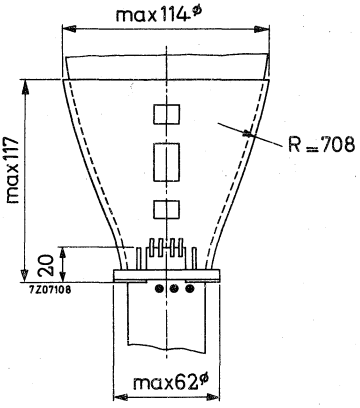

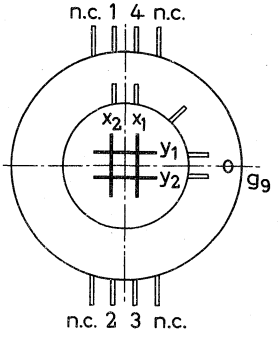

1-2 coil no.1
3-4 coil no.2

The currents required under typical operating conditions, the tube being screened by a mu-metal shield closely surrounding the coils (e.g. 55555), are max. 7 mA per degree of angle correction and max. 4 mA per mm of shift. If no such shield is used these values have to be multiplied by a factor k ($1 < k < 2$), the value of which depends on the diameter of the shield and approaches 2 for the case no shield is present.
The D.C. resistance is approx. 180 Ω per coil.
When designing the supply circuit for these coils it should be considered that the maximum current required in either coil can be 34 mA.

Circuit diagrams

A suitable circuit permitting independent control of orthogonality correction and vertical shift is given in Fig. 1.

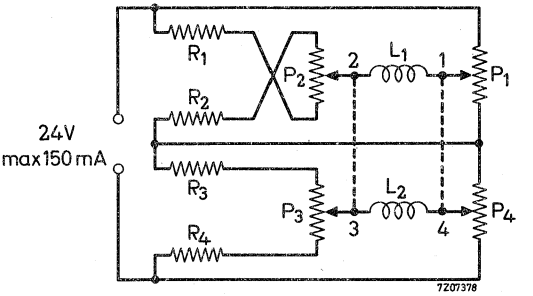

P_1, P_4 : Potentiometers 220 Ω, 3 W, ganged
P_2, P_3 : Potentiometers 150 Ω, 2 W, ganged
R_1, R_2, R_3, R_4: Resistors 33 Ω, 0,5 W

Fig. 1

The dissipation in the potentiometers can be reduced considerably if the requirement of independent control is dropped (see Fig. 2).

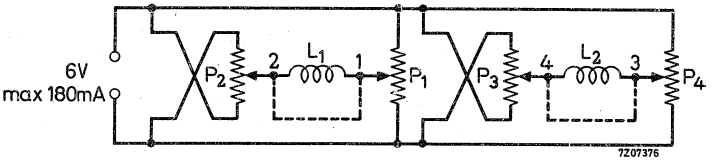

P_1, P_2 : Potentiometers 220 Ω, 1 W, ganged
P_3, P_4 : Potentiometers 220 Ω, 1 W, ganged

Fig. 2

A further reduction of the dissipation can be obtained by inserting a commutator for each coil (see fig.3).
The procedure of adjustment will then become more complicated, but it should be kept in mind that a readjustment is necessary only when the tube has to be replaced.

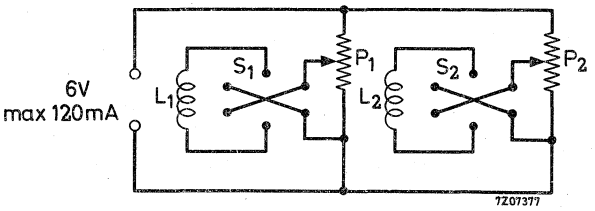

P_1, P_2 : Potentiometers, 500 Ω, 0,5 Watt
S_1, S_2 : Commutators

Fig.3

For the adjustment of the currents the following procedure is recommended:

a. With the tube fully scanned in the vertical direction the scanned area must be shifted so that the useful vertical scan on either side of the geometric centre of the screen meets the published value of 30 mm min.
With the circuit according to fig.1 this is done by means of the ganged potentiometers P_1 and P_4.

b. Adjustment of orthogonality by means of the ganged potentiometers P_2 and P_3 in fig.1. A slight readjustment of P_1 and P_4 may be necessary afterwards.

With a circuit according to fig.2 or 3 these corrections have to be performed by means of successive adjustments of the currents in the coils.
The most convenient deflection signal is a square waveform permitting an easy and fairly accurate check of orthogonality.

INSTRUMENT CATHODE-RAY TUBE

The D13-26../01 is equivalent to the D13-26.. but features an internal graticule. This graticule can be illuminated.

MECHANICAL DATA

Dimensions in mm

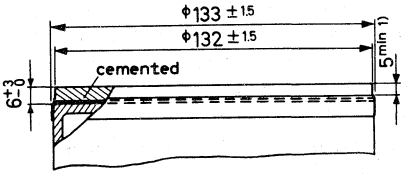

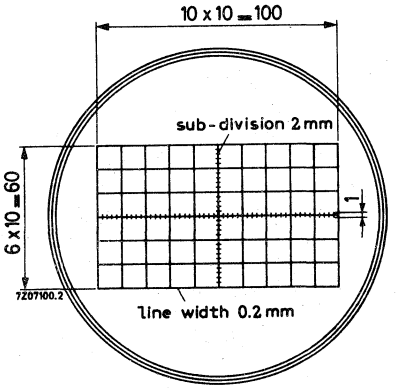

Maximum angle between x-trace and x-axis of the graticule ± 5°

1) Clear area for light conductor.

ALIGNMENT

In order to align the x-trace and the x-axis of the graticule an image rotating coil may be used. This coil should be positioned at one third of the cone length, seen from the face end, and can be attached to the inner surface of the mu-metal shield. Under typical operating conditions maximum 90 ampere-turns are required for alignment.

ILLUMINATION OF THE GRATICULE

To illuminate the internal graticule a light conductor (e.g. of perspex) should be used. In order to achieve the most efficient light conductance, the holes for the lamps and the edge adjacent to the tube should be polished, and the distance between the perspex plate and the tube should be as small as possible. It is advisable to apply reflective material to the outer circumference and, if possible, also to the upper and lower faces of the light conductor. The thickness of the conductor should not exceed 3 mm, and its position relative to the frontplate of the tube should be adjusted for optimum illumination of the graticule lines.

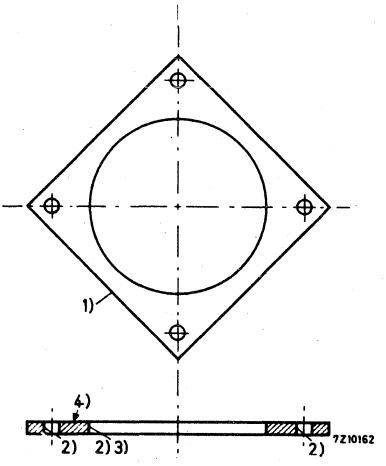

1) Reflective material.
2) Polished.
3) Close and constant distance to front plate of tube.
It is essential that the light conductor and the front plate of the tube are in plane.
4) If possible reflective material.

INSTRUMENT CATHODE-RAY TUBE

13 cm diameter flat faced short oscilloscope tube (max. 35 cm) with post-deflection acceleration by means of a helical electrode. The tube is provided with deflection blanking.

QUICK REFERENCE DATA			
Final accelerator voltage	$V_{g_7(\ell)}$	= 3000	V
Display area		8 cm x full scan	
Deflection coefficient, horizontal	M_x	= 24	V/cm
vertical	M_y	= 11.5	V/cm

SCREEN

	Colour	Persistence
D13-27GH	green	medium short

Useful screen diameter min. 114 mm

Useful scan at $V_{g_7(\ell)}/V_{g_5} = 2$

horizontal full scan

vertical min. 80 mm

The useful scan may be shifted vertically to a max. of 4 mm with respect to the geometric centre of the faceplate.

HEATING

Indirect by A.C. or D.C.; parallel supply

Heater voltage	V_f =	6.3 V
Heater current	I_f =	300 mA

MECHANICAL DATA

Dimensions in mm

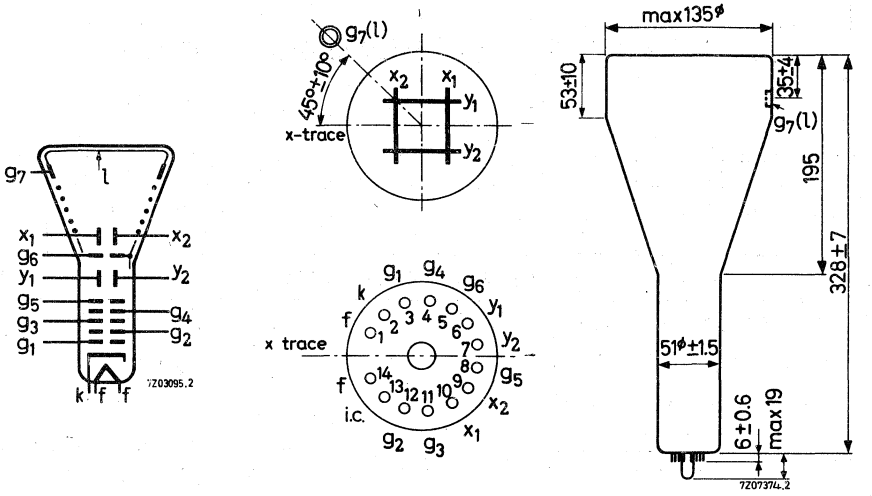

Mounting position: any

The tube should not be supported by the base alone and under no circumstances should the socket be allowed to support the tube.

Base 14 pin all glass

Dimensions and connections

Overall length (also with socket type 55566)	max.	354	mm
Face diameter	max.	135	mm

Net weight approx. 680 g

Accessories

Socket (supplied with tube)	type	55566
Final accelerator contact connector	type	55563A
Mu metal shield	type	55557

CAPACITANCES

x_1 to all other elements except x_2	$C_{x_1(x_2)}$	=	4.5	pF
x_2 to all other elements except x_1	$C_{x_2(x_1)}$	=	4.5	pF
y_1 to all other elements except y_2	$C_{y_1(y_2)}$	=	5	pF
y_2 to all other elements except y_1	$C_{y_2(y_1)}$	=	5.5	pF
x_1 to x_2	$C_{x_1x_2}$	=	2.5	pF
y_1 to y_2	$C_{y_1y_2}$	=	1.2	pF
Grid No.1 to all other elements	C_{g_1}	=	5.5	pF
Cathode to all other elements	C_k	=	5	pF
Grid No.3 to all other elements	C_{g_3}	=	10	pF

FOCUSING electrostatic

DEFLECTION double electrostatic

x plates symmetrical

y plates symmetrical

If use is made of the full deflection capabilities of the tube the deflection plates will intercept part of the electron beam; hence a low impedance deflection plate drive is desirable.

Angle between x and y traces $90^o \pm 1^o$

LINE WIDTH

Measured with the shrinking raster method in the centre of the screen.

Final accelerator voltage	$V_{g_{7(\ell)}}$	=	3000	V
Astigmatism control electrode voltage	V_{g_5}	=	1500	V[2)]
First accelerator voltage	V_{g_2}	=	1500	V
Beam current	$I_{g_{7(\ell)}}$	=	10	μA
Line width	l.w.	=	0.25	mm

HELIX

Post deflection accelerator helix resistance min. 50 MΩ

The helix is connected between $g_{7(\ell)}$ and g_6

2) See page 5

TYPICAL OPERATING CONDITIONS

Final accelerator voltage	$V_{g_{7(\ell)}}$	=	3000	V
Geometry control electrode voltage	V_{g_6}	=	1500 ± 75	V [1]
Astigmatism control electrode voltage	V_{g_5}	=	1500 ± 75	V [2]
Focusing electrode voltage	V_{g_4}	=	300 to 550	V
Deflection blanking electrode voltage	V_{g_3}	=	1500	V
Deflection blanking control voltage	ΔV_{g_3}	=	max. -60	V [3]
First accelerator voltage	V_{g_2}	=	1500	V
Control grid voltage for visual extinction of focused spot	V_{g_1}	=	-38 to -135	V
Deflection coefficient				
horizontal	M_x	=	21 to 27	V/cm
vertical	M_y	=	9.8 to 12.2	V/cm
Deviation of linearity of deflection		=	max. 2	% [4]
Geometry distortion			See note 5	
Useful scan				
horizontal			full scan	
vertical		=	min. 80	mm

CIRCUIT DESIGN VALUES

Focusing voltage	V_{g_4}	=	200 to 370	V per kV of V_{g_5}
Control grid voltage for visual extinction of focused spot	$-V_{g_1}$	=	25 to 90	V per kV of V_{g_2}
Deflection coefficient at $V_{g_{7(\ell)}}/V_{g_5} = 2$				
horizontal	M_x	=	14 to 18	V/cm per kV of V_{g_5}
vertical	M_y	=	6.5 to 8.2	V/cm per kV of V_{g_5}
Control grid circuit resistance	R_{g_1}	=	max. 1.5	MΩ
Deflection plate circuit resistance	R_x, R_y	=	max. 50	kΩ
Focusing electrode current	I_{g_4}	=	-15 to +10	μA [6]

Notes see page 5

LIMITING VALUES (Absolute max. rating system)

Final accelerator voltage	$V_{g_7(\ell)}$	= max.	3300	V
		= min.	1800	V
Geometry control electrode voltage	V_{g_6}	= max.	1700	V
Astigmatism control electrode voltage	V_{g_5}	= max.	1700	V
		= min.	1200	V
Focusing electrode voltage	V_{g_4}	= max.	1200	V
Deflection blanking electrode voltage	V_{g_3}	= max.	1700	V
First accelerator voltage	V_{g_2}	= max.	1700	V
Control grid voltage				
negative	$-V_{g_1}$	= max.	200	V
positive	$-V_{g_1}$	= min.	0	V
Voltage between astigmatism control electrode and any deflection plate	$V_{g_5/x}$	= max.	500	V
	$V_{g_5/y}$	= max.	500	V
Screen dissipation	W_ℓ	= max.	3	mW/cm^2
Ratio $V_{g_7(\ell)}/V_{g_5}$	$V_{g_7(\ell)}/V_{g_5}$	= max.	2	
Cathode current, average	I_k	= max.	300	μA

1) This tube is designed for optimum performance when operating at the ratio $V_{g_7(\ell)}/V_{g_5} = 2$. Operation at other ratio may result in changes in deflection uniformity and geometry distortion. The geometry control electrode voltage should be adjusted for optimum performance. For any necessary adjustment its potential will be within the stated range.

2) The astigmatism control electrode voltage should be adjusted for optimum spot shape. For any necessary adjustment its potential will be within the stated range.

3) For beam blanking of a beam current of 10 μA.

4) The sensitivity at a deflection of less than 75% of the usefull scan will not differ from the sensitivity at a deflection of 25% of the useful scan by more than the indicated value.

5) A graticule, consisting of concentric rectangles of 100 mm x 60 mm and 97 mm x 58 mm is aligned with the electrical x axis of the tube. The edges of a raster will fall between these rectangles with optimum correction potentials applied.

6) Values to be taken into account for the calculation of the focus potentiometer.

INSTRUMENT CATHODE-RAY TUBE

Oscilloscope tube with rectangular 13 cm diagonal flat face and metal-backed screen, provided with internal graticule. The high sensitivities of this mesh tube, together with the sectioned y-deflection plates, render the tube suitable for transistorized oscilloscopes for frequencies up to 100-250 MHz.

QUICK REFERENCE DATA			
Final accelerator voltage	$V_{g9(\ell)}$	15	kV
Display area		100 x 60	mm^2
Deflection coefficient, horizontal	M_x	9, 9	V/cm
vertical	M_y	3	V/cm

SCREEN

	colour	persistence
D13-451GH/45	green	medium short

Useful screen area	min.	100 x 60	mm^2
Useful scan at $V_{g9(\ell)}/V_{g4}$ = 10,			
horizontal	min.	100	mm
vertical	min.	60	mm
Spot eccentricity in horizontal direction		± 8	mm
Spot eccentricity in vertical direction		± 6	mm

The scanned raster can be shifted in vertical direction and aligned with the internal graticule by means of correction coils mounted on the tube (see page 6).
For illumination of the internal graticule see page 8.

HEATING : indirect by a.c. or d.c. ; parallel supply

Heater voltage	V_f	6, 3	V
Heater current	I_f	300	mA

MECHANICAL DATA

Dimensions in mm

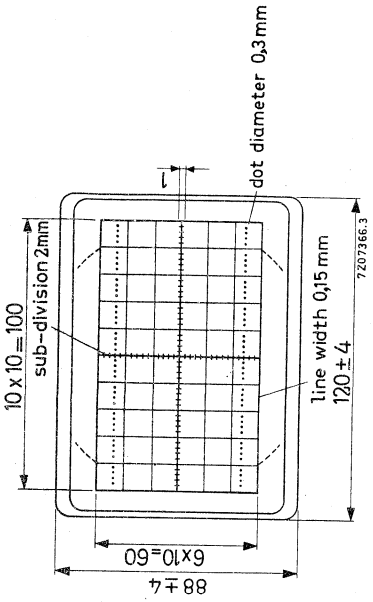

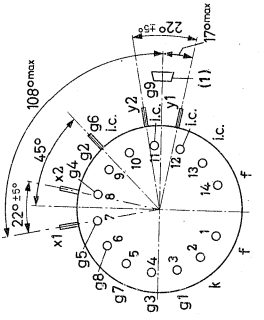

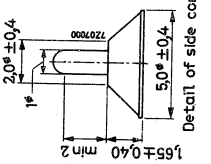

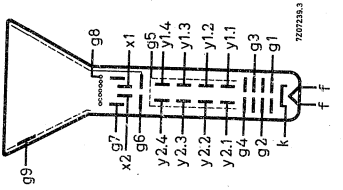

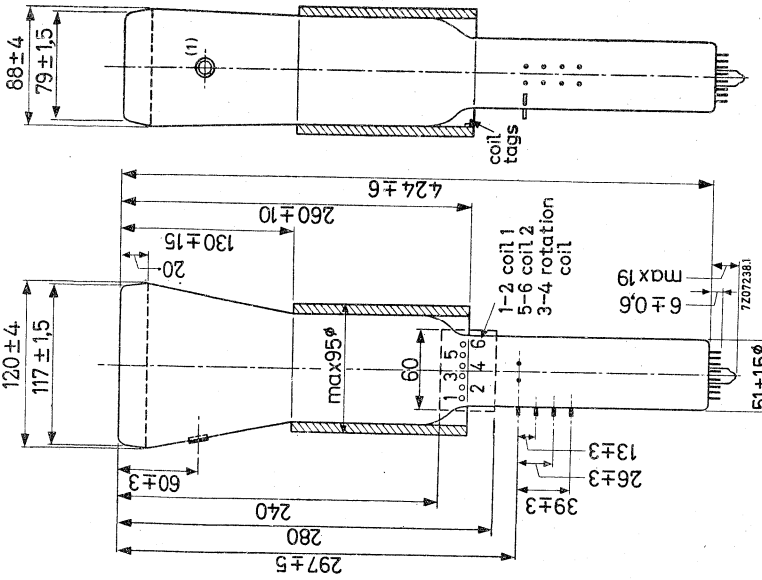

(1) The centre of the contact is located within a square of 10 mm x 10 mm around the true geometrical position.

MECHANICAL DATA (continued)

Mounting position: any

The tube should not be supported by the base alone and under no circumstances should the socket be allowed to support the tube.

Dimensions and connections

See also outline drawing

Overall length (socket inclusive)	max.	449	mm
Face dimensions	max. 124 x	92	mm^2
Net weight	approx.	1100	g
Base	14-pin all glass		
Accessories			
Socket	type 55566		
Final accelerator contact connector	type 55563A		
Side-contact connector	type 55561		
Mu-metal screen	type 55568		

CAPACITANCES

x_1 to all other elements except x_2	$C_{x_1(x_2)}$	4,8	pF
x_2 to all other elements except x_1	$C_{x_2(x_1)}$	4,8	pF
$y_{1.1}$ to all other elements except $y_{2.1}$	$C_{y_{1.1}(y_{2.1})}$	1,2	pF
x_1 to x_2	$C_{x_1x_2}$	2,5	pF
$y_{1.1}$ to $y_{2.1}$	$C_{y_{1.1}y_{2.1}}$	0,8	pF
Control grid to all other elements	C_{g_1}	6	pF
Cathode to all other elements	C_k	5	pF

FOCUSING electrostatic

DEFLECTION double electrostatic

x plates symmetrical

y plates symmetrical

If use is made of the full deflection capabilities of the tube the deflection plates will intercept part of the electron beam; hence a low impedance deflection plate drive is desirable.

Angle between x and y traces 90 ° (see "Correction Coils")

LINE WIDTH

Measured with the shinking raster method in the centre of the screen under typical operating conditions, adjusted for optimum spot size at a beam current I_ℓ = 10 μA

Line width	l.w.	0,40	mm

TYPICAL OPERATING CONDITIONS

Final accelerator voltage	$V_{g9(\ell)}$	15	kV
Post deflection shield voltage (mesh) w.r.t. V_{g_7}	$V_{g8/g7}$	-12 to -18	V
Geometry control electrode voltage	V_{g_7}	1500 ± 70	V [1]
Interplate shield voltage	V_{g_6}	1500	V [2]
Deflection plate shield voltage	V_{g_5}	1500	V [2]
Astigmatism control electrode voltage	V_{g_4}	1500 ± 50	V [3]
Focusing electrode voltage	V_{g_3}	400 to 550	V
First accelerator voltage	V_{g_2}	1500	V
Control grid voltage for visual extinction of focused raster	V_{g_1}	-40 to -100	V
Deflection coefficient, horizontal	M_x	9,9	V/cm
		max. 11	V/cm
vertical	M_y	3	V/cm
		max. 3,3	V/cm
Deviation of linearity of deflection		max. 2	% [4]
Geometry distortion		see note 5	
Useful scan, horizontal		100	mm
vertical		60	mm

1) This tube is designed for optimum performance when operating at the ratio $V_{g9(\ell)}/V_{g_4}$ = 10. Operation at other ratio may result in changes in deflection uniformity and geometry distortion. The geometry control electrode voltage should be adjusted for optimum performance. For any necessary adjustment its potential will be within the stated range.

2) This voltage should be equal to the mean x- and y plates potential.

3) The asigmatism control electrode voltage should be adjusted for optimum spot shape. for any necessary adjustment its potential will be within the stated range.

4) The sensitivity at a deflection of less than 75 % of the useful scan will not differ from the sensitivity at a deflection of 25 % of the useful scan by more than the indicated value.

5) A graticule, consisting of concentric rectangles of 100 mm x 60 mm and 98 mm x 58,2 mm is aligned with the electrical x axis of the tube.
With optimum correction potentials applied the edges of a raster will fall between these rectangles.

LIMITING VALUES (Absolute max. rating system)

Final accelerator voltage	$V_{g9(\ell)}$	max.	16,5	kV
		min.	9	kV
Post deflection shield voltage	V_{g8}	max.	2400	V
Geometry control electrode voltage	V_{g7}	max.	2400	V
Interplate shield voltage	V_{g6}	max.	2400	V
		min.	1350	V
Deflection plate shield voltage	V_{g5}	max.	2400	V
Astigmatism control electrode voltage	V_{g4}	max.	2400	V
		min.	1350	V
Focusing electrode voltage	V_{g3}	max.	2400	V
First accelerator voltage	V_{g2}	max.	1800	V
		min.	1350	V
Control grid voltage, negative	$-V_{g1}$	max.	200	V
positive	V_{g1}	max.	0	V
Cathode to heater voltage, cathode positive	V_{kf}	max.	200	V
cathode negative	$-V_{kf}$	max.	125	V
Voltage between astigmatism control electrode and any deflection plate	$V_{g4/x}$	max.	500	V
	$V_{g4/y}$	max.	500	V
Screen dissipation	W_ℓ	max.	8	mW/cm^2
Ratio $V_{g9(\ell)}/V_{g4}$	$V_{g9(\ell)}/V_{g4}$	max.	10	
Average cathode current	I_k	max.	300	μA

CORRECTION COILS

The D13-451../45 is provided with a coil unit consisting of:

1. a pair of coils for
   a. correction of the orthogonality of the x and y traces (which means that the angle between the x and y traces at the centre of the screen can be made exactly 90°).
   b. vertical shift of the scanned area.
2. a single coil for image rotation (aligning the x trace with the x lines of the graticule).

Orthogonality and shift

The currents required under typical operating conditions are max. 4 mA per degree of angle correction and max. 2 mA per millimeter of shift; the maximum required current for both puposes taken together does not exceed 18 mA.
These values apply to a tube operating with a mu-metal shield closely surrounding the coils.
If no such shield is used they have to be multiplied by a factor K(1<K<2) the value of which depends on the dimensions of the shield and approaches 2 for the case no shield is present.
The d.c. resistance of the coil is approx. 220 Ω.

Image rotation

The image rotation coil is concentrically wound. Under typical operating conditions a current of max. 45 mA will be required for complete correction. The d.c. resistance of this coil is approx. 550 Ω.

Circuit diagrams

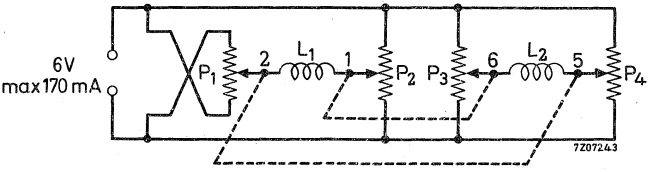

Fig. 1

P_1, P_2 potentiometers 220 Ω, 1 watt; ganged
P_2, P_3 potentiometers 220 Ω, 1 watt; ganged

With the above circuit almost independent control for shift and angle correction is achieved. This facilitates the correct adjustment to a great extent. The dissipation of the potentiometers can be reduced considerably if the requirement of independent controls is dropped (see Fig. 2).

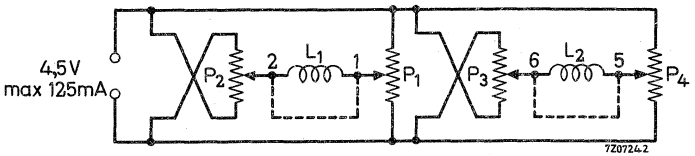

Fig. 2

P_1, P_2 potentiometers 220 Ω, 1 watt; ganged
P_3, P_4 potentiometers 220 Ω, 1 watt; ganged

A further reduction of dissipation can be obtained by providing a commutator for each coil (see circuit Fig. 3).
The procedure of adjustment will then become more complicated but it should be kept in mind that a readjustment is necessary only when the tube has to be replaced.

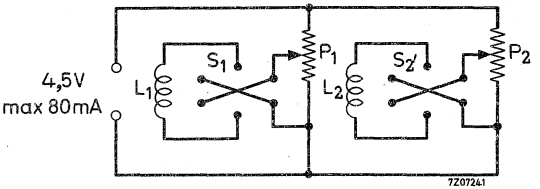

Fig. 3

P_1, P_2 potentiometers 220 Ω, 1 watt
S_1, S_2 commutators

A suitable circuit for the image rotating coil is given in Fig. 4.

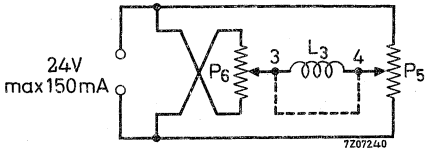

Fig. 4

P_5, P_6 potentiometers 500 Ω, 3 watt; ganged

The following prodedure of adjustment is recommended:

a. Align the x trace with the graticule by means of the image rotating coil.

b. With the tube fully scanned in the vertical direction, the image has to be shifted so that the graticule is fully covered. With the circuit according to Fig. 1 this is done by means of the ganged potentiometers P_1 and P_4.

c. Adjustment of orthogonality by means of the ganged potentiometers P_2 and P_3. A A slight readjustment of P_1 and P_4 may be necessary afterwards.

d. Readjustment of the image rotation if necessary.

With a circuit according to Fig. 2 or 3 these corrections have to be performed by means of successive adjustments of the currents in the coils.

The most convenient deflection signal is a square wave form permitting an easy and fairly accurate visual check of orthogonality.

ILLUMINATION OF THE GRATICULE

To illuminate the internal graticule a light conductor (e.g. of perspex) should be used. In order to achieve the most efficient light conductance, the holes for the lamps and the edge adjacent to the tube should be polished, and the distance between the perspex plate and the tube should be as small as possible. It is advisable to apply reflective material to the outer circumference and, if possible, also to the upper and lower faces of the light conductor. The thickness of the conductor should not exceed 3 mm, and its position relative to the faceplate of the tube should be adjusted for optimum illumination of the graticule lines.

INSTRUMENT CATHODE-RAY TUBE

13 cm diameter flat faced monoaccelerator oscilloscope tube primarily intended for use in inexpensive oscilloscopes and read-out devices.

QUICK REFERENCE DATA			
Accelerator voltage	$V_{g_2,g_4,g_5(\ell)}$	2000	V
Display area		100 x 80	mm^2
Deflection coefficient, horizontal	M_x	31.3	V/cm
vertical	M_y	14.4	V/cm

SCREEN

	colour	persistence
D13-480GH	green	medium short
D13-480GM	yellowish green	long

Useful screen diameter	min.	114	mm
Useful scan			
horizontal	min.	100	mm
vertical	min.	80	mm

The useful scan may be shifted vertically to a max. of 6 mm with respect to the geometric centre of the faceplate.

HEATING: Indirect by A.C. or D.C.; parallel supply

Heater voltage	V_f	6.3	V
Heater current	I_f	300	mA

MECHANICAL DATA (Dimensions in mm)

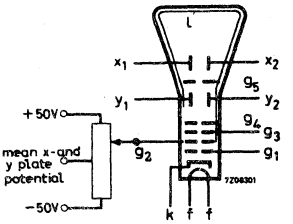

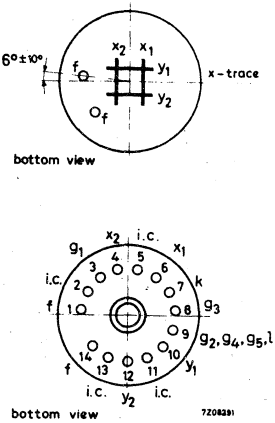

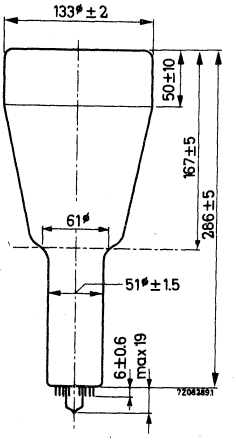

Mounting position: any

The tube should not be supported by the base alone and under no circumstances should the socket be allowed to support the tube.

Dimensions and connections

See also outline drawing

Overall length	max.	310	mm
Face diameter	max.	135	mm

Base 14 pin all glass

Net weight	approx.	650	g

Accessories

Socket (supplied with tube)	type	55566
Mu-metal shield	type	55580

CAPACITANCES

x_1 to all other elements except x_2	$C_{x1(x2)}$	4	pF
x_2 to all other elements except x_1	$C_{x2(x1)}$	4	pF
y_1 to all other elements except y_2	$C_{y1(y2)}$	3.5	pF
y_2 to all other elements except y_1	$C_{y2(y1)}$	3	pF
x_1 to x_2	C_{x1x2}	1.6	pF
y_1 to y_2	C_{y1y2}	1.1	pF
Control grid to all other elements	C_{g1}	5.5	pF
Cathode to all other elements	C_k	4	pF

FOCUSING electrostatic

DEFLECTION double electrostatic

x plates symmetrical

y plates symmetrical

If use is made of the full deflection capabilities of the tube the deflection plates will intercept part of the electron beam, hence a low impedance deflection plate drive is desirable.

Angle between x and y traces 90 ± 1°

LINE WIDTH 3)

Measured with the shrinking raster method in the centre of the screen under typical operating conditions, adjusted for optimum spot size at a beam current I_ℓ = 10 μA.1)

Line width	l.w.	0.30	mm

1) As the construction of this tube does not permit a direct measurement of the beam current, this current should be determined as follows:
a) under typical operating conditions, apply a small raster display (no overscan), adjust V_{g1} for a beam current of approx. 10 μA and adjust V_{g3} and $V_{g2,g4,g5,\ell}$ for optimum spot quality at the centre of the screen.
b) under these conditions, but no raster, the deflection plate voltages should be changed to
$V_{y1} = V_{y2} = 2000$ V; $V_{x1} = 1300$ V; $V_{x2} = 1700$ V, thus directing the total beam current to x2.
Measure the current on x_2 and adjust V_{g1} for $I_{x2} = 10$ μA (being the beam current I_ℓ)
c) set again for the conditions under a), without touching the V_{g1} control. Now a raster display with a true 10 μA screen current is achieved.
d) focus optimally in the centre of the screen (do not adjust the astigmatism control) and measure the line width.

3) See page 4

TYPICAL OPERATING CONDITIONS [3]

Accelerator voltage	$V_{g_2, g_4, g_5, \ell}$	2000	V
Astigmatism control voltage	$\Delta V_{g_2, g_4, g_5, \ell}$	± 50	V [1]
Focusing electrode voltage	V_{g_3}	220 to 370	V
Control grid voltage for visual extinction of focused spot	V_{g_1}	max. −65	V
Grid drive for 10 μA screen current		approx. 10	V
Deflection coefficient, horizontal	M_x	31.3 max. 33	V/cm V/cm
vertical	M_y	14.4 max. 15.5	V/cm V/cm
Deviation of linearity of deflection		max. 1	% [2]
Geometry distortion		see note 4	
Useful scan, horizontal		min. 100	mm
vertical		min. 80	mm

LIMITING VALUES (Absolute max. rating system)

Accelerator voltage	$V_{g_2, g_4, g_5, \ell}$	max. 2200 min. 1500	V V
Focusing electrode voltage	V_{g_3}	max. 2200	V
Control grid voltage, negative	$-V_{g_1}$	max. 200 min. 0	V V
Cathode to heater voltage	V_{kf} $-V_{kf}$	max. 125 max. 125	V V
Grid drive, average		max. 20	V
Screen dissipation	W_ℓ	max. 3	mW/cm^2

---

1) All that will be necessary when putting the tube into operation is to adjust the astigmatism control voltage once for optimum spot shape in the screen centre. The control voltage will always be in the range stated, provided the mean x and certainly the mean y plate potential was made equal to $V_{g_2, g_4, g_5, \ell}$ with zero astigmatism correction.

2) The sensitivity at a deflection of less than 75% of the useful scan will not differ from the sensitivity at a deflection of 25% of the useful scan by more than the indicated value.

3) The mean x and certainly the mean y plate potential should be equal to $V_{g_2, g_4, g_5, \ell}$ with astigmatism adjustment set to zero.

4) A graticule, consisting of concentric rectangles of 70 mm x 85 mm and 68.8 mm x 83 mm as aligned with the electrical x-axis of the tube. The edges of a raster will fall between these ractangles.

INSTRUMENT CATHODE-RAY TUBE

13 cm diameter flat faced monoaccelerator oscilloscope tube with low heater consumption.

QUICK REFERENCE DATA

Accelerator voltage	$V_{g2, g4, g5 (\ell)}$	2000	V
Display area		100 x 80	mm^2
Deflection coefficient			
horizontal	M_x	31,3	V/cm
vertical	M_y	14,4	V/cm

The D13–481.. is equivalent to the type D13–480.. except for the following.

HEATING

Indirect by a.c. or d.c.; parallel

Heater voltage	V_f	6,3	V
Heater current	I_f	95	mA

LIMITING VALUES (Absolute maximum rating system)

Cathode to heater voltage			
positive	V + k/f − max.	100	V
negative	V − k/f + max.	15	V

CAPACITANCES

Cathode to all other elements	C_k	2,3	pF

INSTRUMENT CATHODE-RAY TUBE

The D13-500GH/01 is a wide-band oscilloscope tube designed for observation and measurement of high frequency phenomena.
This tube has a rectangular 13 cm diagonal flat face with aluminized screen and internal graticule, post-deflection accelerator with mesh, vertical deflection by means of a symmetrical helix system, scan magnification in the vertical direction by means of an electrostatic quadrupole lens and correction coils for trace alignment, vertical shift of the display area and correction of the orthogonality of traces.

QUICK REFERENCE DATA			
Final accelerator voltage	$V_{g_{13}(\ell)}$	15	kV
Display area		100 x 60	mm^2
Deflection coefficient, horizontal	M_x	13.5	V/cm
vertical	M_y	1.7	V/cm
Bandwidth of the vertical deflection system	B	800	MHz

SCREEN

	colour	persistence
D13-500GH/01	green	medium short

Useful screen dimensions	min.	100 x 60	mm^2
Useful scan at $V_{g_{13}(\ell)}/V_{g2} = 6$			
horizontal	min.	100	mm
vertical	min.	60	mm
Eccentricity in horizontal direction	max.	7	mm
Eccentricity in vertical direction	max.	6	mm

The scanned raster can be shifted in vertical direction and aligned with the internal graticule by means of correction coils mounted on the tube (see page 14).

For illumination of the internal graticule see page 16.

DESCRIPTION

General

The D13-500GH/01 has been primarily designed for wide-band high-frequency applications. It combines high brightness, high deflection sensitivity and a large bandwidth of the vertical deflection system.

In order to obtain the high sensitivity, the post-deflection acceleration system embodies a mesh. The sensitivity in the vertical direction has been further increased by means of an electrostatic quadrupole lens that has been inserted between the vertical deflection system and the horizontal deflection plates. The large bandwidth has been obtained by using, for the vertical deflection, a delay-line system instead of deflection plates. With the typical operating conditions, 2500 V first accelerator voltage and 15000 V final accelerator voltage, the vertical and the horizontal deflection factors are about 2 V/cm and 15 V/cm respectively, with a 10 x 6 cm^2 display area.

The bulb has a rectangular face and the screen is aluminized. To eliminate parallax errors, an internal graticule is incorporated. Correction coils have been provided to permit image rotation, correction of the orthogonality of traces and the adjustment of the vertical useful scan with respect to the graticule.

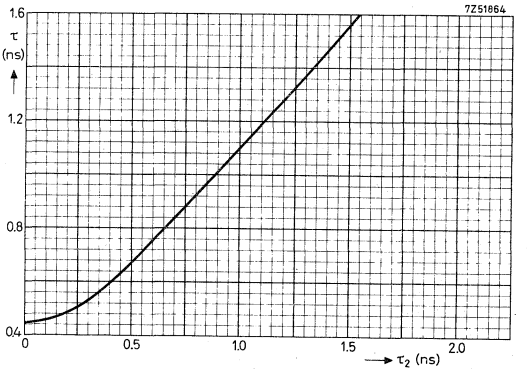

Fig.1
Rise time of the display τ as a function of the rise time of the input signal τ_2

The vertical deflection system

For the vertical deflection, a delay-line system is used so that transit-time effects are practically eliminated. The system consists of two flattened helices to which a symmetrical deflection signal should be applied. Under these conditions, the characteristic impedance of each helix is 150 Ω. The input and output terminals are brought out on opposite sides of the neck on the same plane. The input terminals are connected to the beginning of the helices by means of a matched, internal two-wire transmission line. The output of the deflection system should be properly terminated in order to avoid signal reflections.

With the typical operating conditions, the band-width of the deflection system, i.e. the frequency at which the sensitivity is 3 dB below its value at D.C., is about 800 MHz. Even above this frequency, the response decreases only gradually so that, for narrow-band applications, the tube can be used with reduced vertical sensitivity up to about 2000 MHz.

The rise time τ_1, i.e. the time interval during which the display of an ideal step-function signal applied to the input goes from 10% to 90% of its final value, is about 0.45 ns. If the input signal has the rise-time τ_2, the rise-time τ of the display is approximately given by

$$\tau = \sqrt{\tau_1^2 + \tau_2^2}$$

In Fig.1, τ has been plotted as a function of τ_2, with $\tau_1 = 0.45$ ns. If, for example, the tube is used in combination with an amplifier and the rise-time of the display is to be 1.4 ns (corresponding with 250 MHz band-width), the rise-time of the amplifier should be 1.33 ns. It can be seen that in this region the rise-time of the display is almost equal to the amplifier rise-time, without a significant contribution of the cathode-ray tube.

If the tube is to be used without an amplifier in order to make use of its full band-width capabilities, care should be taken to ensure good symmetry of the input signal.

Fig.2 shows how the tube can be connected to a 50 Ω coaxial input. A matched power divider is used which delivers two identical output signals. One of these is inverted by means of a pulse inverter. An additional length of 50 Ω cable should be inserted into the path of the non-inverted signal having the same delay time as the pulse inverter so that the two signals arrive at the input of the deflection system at the same time. The 75 Ω shunt resistors serve to obtain a correct termination of the 50 Ω lines. Since each branch of the power divider has 6 dB attenuation, the sensitivity, measured at the 50 Ω input, is also 2 V/cm.

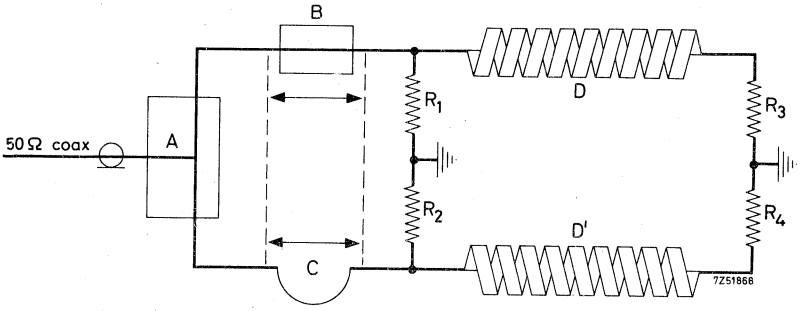

Fig.2
Connection to an asymmetrical 50 Ω input

A: Power divider
B: Inverter
C: Cable
R_1, R_2: Resistors 75 Ω
R_3, R_4: Resistors 150 Ω
D , D' : Deflection system

Note: Delay of inverter B and cable C are equal.

Scan magnifier and focusing system

As already mentioned, an electrostatic quadrupole lens, i.e. an electron lens which has two mutually perpendicular planes of symmetry, divergent in one plane and convergent in the other, is used for the magnification of the vertical deflection. This lens is inserted between the vertical deflection system and the horizontal deflection plates, with its plane of divergence in the direction of the vertical deflection. Therefore, it magnifies the vertical deflection without affecting the horizontal deflection.

Because of the astigmatic properties of this quadrupole lens, a conventional, rotationally symmetrical focusing lens cannot be used. Instead of this, two more electrostatic quadrupole lenses are incorporated so that focusing is accomplished by means of three quadrupole lenses, with alternating orientation of their planes of convergence and divergence. The focusing action is schematically shown in Fig.3. The strength of the scan-magnifier lens is controlled by applying to the electrode g_9 a negative voltage with respect to g_2. Within a certain range of this voltage, corresponding to a scan-magnification factor Msc, i.e. the ratio of the deviations on the screen with and without scan magnification respectively, between 1.8 and 2 the combined effect of the three lenses will yield an approximately circular spot at moderate beam currents. (At high beam currents, when space-charge repulsion causes an increase of spot size, the width of the vertical lines will be smaller than that of the horizontal lines).

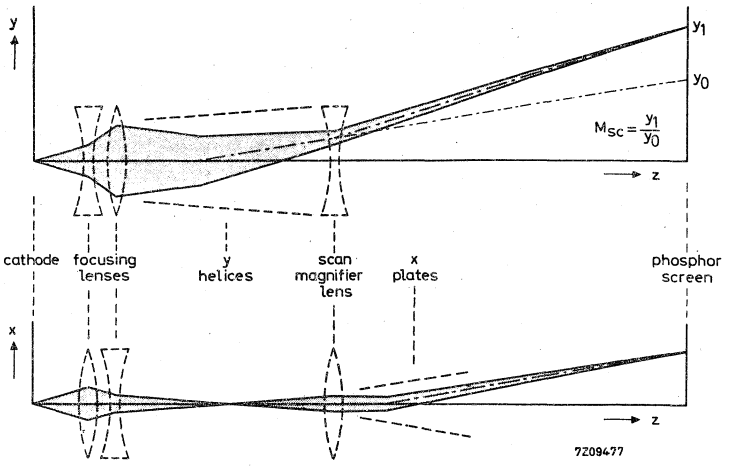

Fig.3

In this range, line-width at a fixed value of screen current, and screen current at a fixed value of grid No.1 voltage, are increasing functions of the scan-magnification factor. Figs.4 and 5 show the average relative change with respect to the values at Msc = 1.9 which, generally, is the most suitable compromise.

For minimum defocusing of vertical lines near the upper and lower edge of the display area, the electrode g_8 should be kept at a positive voltage with respect to g_2 (about 200 V with 2500 V first accelerator voltage). As this voltage also has some effect on the scan-magnification factor, both g_8 and g_9 should be connected to g_2 when the deviation without scan magnification is being measured.

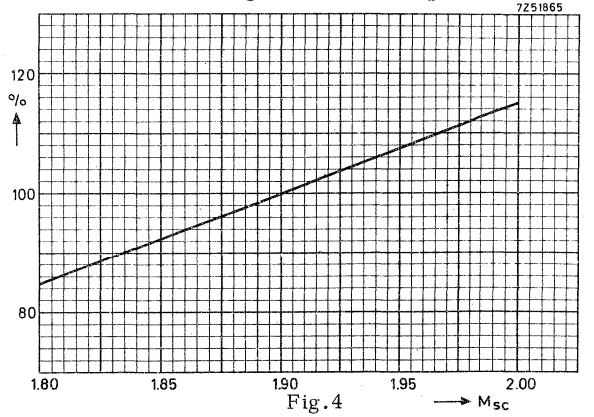

Fig.4

Line-width as a function of the scan-magnification factor (approximately)
Line-width at M_{sc} = 1.9 is 100%, I_{screen} = const.

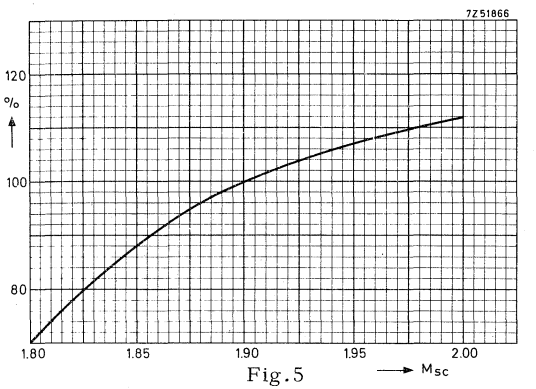

Fig.5

Screen current as a function of the scan-magnification factor (approximately)
Screen current at M_{sc} = 1.9 is 100%, V_{g_1} = const.

For the adjustment of the scan-magnification factor the following procedure is recommended:

a. Set V_{g_8} and V_{g_9} to 0 with respect to g_2.
b. Display a time-base line and adjust V_{g_6} so that the line appears sharply focused.
c. Apply a square wave signal to the vertical deflection system (the vertical parts of the trace will be out of focus but this is immaterial) and adjust the amplitude so that the height of the display has a convenient value, e.g. 30 mm.
d. Set V_{g_8} and V_{g_9} to the appropriate values and readjust V_{g_6} so that the horizontal parts of the trace are again in focus.
e. Check the height of the display (e.g. for M_{sc} = 1.9 this height should now be 57 mm).
f. If necessary, readjust V_{g_9} until the desired value of M_{sc} has been obtained.

Focusing is controlled by means of the electrode voltage V_{g_4} and V_{g_6}. The electrodes g_5 and g_7 can be used to centre the beam with respect to the vertical and horizontal deflection systems.

The voltages of the focusing and correction electrodes can be adjusted as follows:

a. Display a square-wave signal on the screen so that both horizontal and vertical traces are visible.
b. Adjust V_{g_6} so that the horizontal parts of the display are in focus.
The vertical parts will, in general, be out of focus.
c. Adjust V_{g_4} so that the vertical traces are brought into focus.
Now the horizontal parts of the display will be out of focus again.
d. Repeat b) and c) successively until both vertical and horizontal traces are simultaneously in focus.
e. Adjust V_{g_3} for minimum width of a horizontal line.
If necessary, readjust focusing voltages V_{g_4} and V_{g_6}.

f. Adjust V_{g_7} for equal brightness at the left-hand and right-hand edges of the display area. If necessary, readjust the focus by means of V_{g_6}.
g. Adjust V_{g_5} so that the position of a horizontal trace not deflected in the vertical direction is at the centre of the vertical useful scan. If necessary, readjust the focus by means of V_{g_4}.

If the graticule is not fully covered by the scanned area the image should be shifted by adjusting the correction coil current (see page 16) before the adjustment of V_{g_5} is made.

The procedure for the adjustment of the scan-magnification factor and for focusing, as described above, seems to be rather complicated.
However, in practice it will be sufficient to adjust V_{g_9} to its nominal value without determining the scan-magnification factor for each individual tube. As to focusing, the user can, with some experience, achieve the best setting with very few adjustments.

Post-deflection acceleration

The use of a p.d.a. shield (mesh) ensures a high deflection sensitivity. A geometry control electrode, g_{11}, serves for the correction of pin cushion or barrel distortion of the pattern. In order to suppress background illumination due to secondary electrons originating from the p.d.a. shield g_{12}, this shield should be kept 12 V negative with respect to g_{11} whereas the voltage of the interplate shield, g_{10} should be equal to the mean x-plate potential.

HEATING: Indirect by A.C. or D.C.; parallel supply

Heater voltage	V_f	6.3	V
Heater current	I_f	300	mA

CAPACITANCES

x_1 to all other elements except x_2	$C_{x_1(x_2)}$	4.5	pF
x_2 to all other elements except x_1	$C_{x_2(x_1)}$	4.5	pF
x_1 to x_2	$C_{x_1x_2}$	2.7	pF
Control grid to all other elements	C_{g_1}	6	pF
Cathode to all other elements	C_k	5	pF
External conductive coating to all other elements	C_m	1500	pF

1) Clear area for light conductor.
2) These dimensions apply to the illumination plate which will always be within the limits 117 ± 1.5 x 79 ± 1.5 mm of the tube face.
3) The soldering tags will be situated within a rectangle of 60 mm x 40 mm on the rearside of the tube.

MECHANICAL DATA

Dimensions in mm

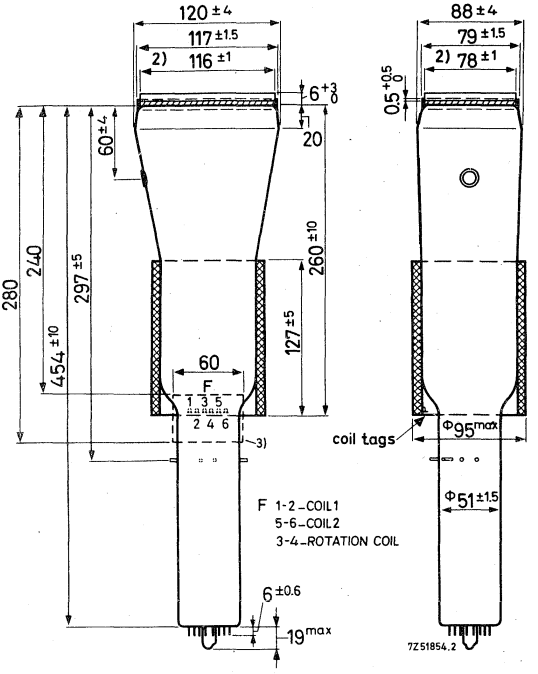

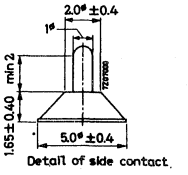

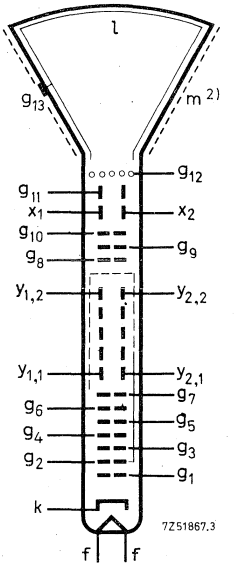

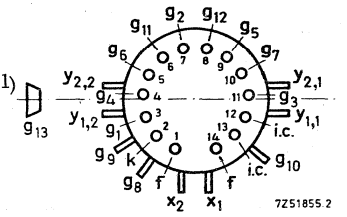

1) The centre of the contact is located within a square of 10 mm x 10 mm around the true geometrical position.

2) The external conductive coating must be earthed.

Notes: see page 7

MECHANICAL DATA (continued)

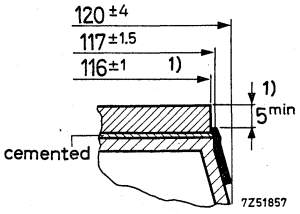

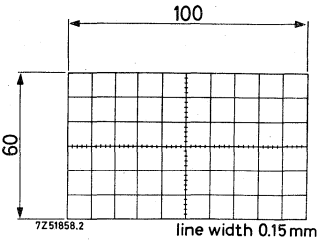

Mounting position: any

The tube should not be supported by the base alone and under no circumstances should the socket be allowed to support the tube.

Dimensions and connections

See also outline drawing

Overall length (socket and front glass plate inclusive)	max.	492	mm
Face dimensions	max.	124 x 92	mm^2
Net weight	approx.	1300	g
Base		14-pin all glass	

Accessories

Socket	type 55566
Final accelerator contact connector	type 55563A
Side contact connector	type 55561
Mu-metal screen	type 55582

In order to avoid damage to the side contacts the narrower end of the mu-metal screen should have an internal diameter of not less than 65 mm.

[1]) see page 7

FOCUSING electrostatic [1])

DEFLECTION double electrostatic

x plates symmetrical

The y deflection system consists of a symmetrical delay line system.

Characteristic impedance	2 x 150	Ω
Bandwidth (-3 dB)	800	MHz [2])
Rise time	< 0.45	ns [3])

If use is made of the full deflection capabilities of the tube the deflection plates will intercept part of the electron beam: hence a low impedance deflection plate drive is desirable.

Angle between x and y traces 90° [4]) (see page 14 "Correction coils")

---

1) Because of the applications of a quadrupole lens for the magnification of the vertical deflection, two more quadrupole lenses are used for focusing. Therefore, controls for two voltages have to be provided.

2) The band-width is defined as the frequency at which the vertical deflection sensitivity is 3 dB lower than at D.C.

3) The rise-time is defined as the time interval between 10% and 90% of the final value of deflection when an ideal step-function signal is applied to the vertical deflection system. If the actual signal has an appreciable rise-time τ_2, the rise-time of the tube can be determined from

$$\tau_1 = \sqrt{\tau^2 - \tau_2^2}$$

where τ is the rise-time observed on the display.
This should be measured after the angle between the x-traces and y-traces has been corrected by means of the correction coils, otherwise two measurements have to be taken (using either a different polarity of the vertical deflection signal or different direction of the time-base sweep) and the true value of τ has to be calculated as the arithmetic mean of the two results.

4) Deviations from the orthogonality of traces can be eliminated by means of correction coils.

LINE WIDTH

Measured with the shrinking raster method in the centre of the screen under typical operating conditions, adjusted for optimum spot size at a beam current I_ℓ = 10 µA and a screen magnification factor M_{sc} = 1.9. See also [3] page 13.

Line width	l.w.	approx. 0,35 mm		

TYPICAL OPERATING CONDITIONS

Final accelerator	$V_{g13(\ell)}$		15	kV	
Post deflection shield voltage (with respect to g_{11})	$V_{g12-g11}$		−9 to −15	V	
Geometry control electrode voltage	V_{g11}		2500 ±100	V	1)
Interplate shield voltage	V_{g10}		2500	V	2)
Scan magnifier electrode voltage (with respect to g_2)	V_{g9-g2}		−250 to −375	V	3)
Correction electrode voltage (with respect to g_2)	V_{g8-g2}		+200	V	4)
Horizontal beam centering electrode voltage	V_{g7}		2500 ±70	V	5)
Vertical beam centering electrode voltage	V_{g5}		2500	V	
Focusing electrode voltages (with respect to g_2)	V_{g6-g2}		-450 to -650	V	7)
	V_{g4-g2}		-650 to -850	V	7)
Spot correction electrode voltage	V_{g3}		2500 ±70	V	8)
First accelerator voltage	V_{g2}		2500	V	
Control grid voltage for visual extinction of a focused spot	V_{g1}		−75 to −150	V	
Deflection coefficient, horizontal	M_x	typ.	13.5	V/cm	
		max.	15.0	V/cm	
vertical	M_y	typ.	1.7	V/cm	9)
		max.	2.0	V/cm	
Deviation of linearity of deflection			2	%	10)
Geometry distortion			see note 11		
Useful scan, horizontal			100	mm	
vertical			60	mm	

Notes see page 13

LIMITING VALUES (absolute max. rating system)

Final accelerator voltage	$V_{g13(\ell)}$	max.	18 000	V
		min.	9 000	V
Post-deflection shield voltage	V_{g12}	max.	3 100	V
Geometry control electrode voltage	V_{g11}	max.	3 100	V
Interplate shield voltage	V_{g10}	max.	3 100	V
Scan-magnifier electrode voltage	V_{g9}	max.	3 000	V
Correction electrode voltage	V_{g8}	max.	3 200	V
Focusing electrode voltages	V_{g6}	max.	3 000	V
	$-V_{g6\text{-}g2}$	max.	1 000	V
	V_{g4}	max.	3 000	V
	$-V_{g4\text{-}g2}$	max.	1 000	V
Beam centering electrode voltages	V_{g7}	max.	3 100	V
	V_{g5}	max.	3 100	V
Spot correction electrode voltage	V_{g3}	max.	3 100	V
First accelerator voltage	V_{g2}	max.	3 000	V
		min.	2 000	V
Control grid voltage, negative	$-V_{g1}$	max.	200	V
positive	V_{g1}	max.	0	V
Cathode to heater voltage				
cathode positive	V_{kf}	max.	125	V
cathode negative	$-V_{kf}$	max.	125	V
Voltage between first accelerator and any deflection electrode	$V_{g2\ x}$	max.	500	V
	$V_{g2\ y}$	max.	500	V
Screen dissipation	W_ℓ	max.	3	mW/cm^2
Average cathode current	I_k	max.	300	μA

Notes to page 11

1) This voltage should be adjusted for optimum pattern geometry.

2) This voltage should be equal to the mean x-plate potential.

3) The range indicated corresponds to a scan magnification factor, M_{sc}, i.e. the ratio by which the vertical deviation on the screen is increased, in the approximate range $1.8 < M_{sc} < 2.0$, and the tube should not be operated outside this range. Within this range, line width and screen current at a fixed value of the control grid voltage are increasing functions of M_{sc}. The best compromise between brightness and line width is usually found at $M_{sc} \approx 1.9$ which corresponds to $V_{g9\text{-}g2} \approx 310$ V.

4) For minimum defocusing of vertical lines near the upper and lower edges of the scanned area this voltage should be adjusted approximately to the value indicated. Since the value $V_{g8\text{-}g2}$ has some effect on the scan magnification factor both V_{g8} and V_{g9} should be connected to g_2 when the deviation without scan magnification is to be measured.

5) This voltage should be adjusted for equal brightness in the x-direction with respect to the electrical centre of the tube.

7) These voltages should be stabilized to within 1 V.

8) This voltage should be adjusted for minimum width of a horizontal line.

9) For a scan magnification factor $M_{sc} = 1.9$.
In the above mentioned range of $V_{g9\text{-}g2}$ the vertical deflection factor will vary approximately ± 5%.

10) The sensitivity at a deflection of less than 75 % of the useful scan will not differ from the sensitivity at a deflection of 25 % of the useful scan by more than the indicated value.

11) A ractangle of 98 mm x 58.2 mm is concentrically aligned with the internal graticule of the tube. With optimum corrections applied, the edges of a raster will fall between this rectangle and the boundary lines of the internal graticule.

CORRECTIONS COILS

The tube is provided with a coil unit consisting of:

1. A pair of coils (No.1 and 2), with approx. 220 Ω resistance per coil, for
   a) correction of the orthogonality of the x-and y-traces so that the angle between these traces at the centre of the screen can be made exactly 90°.
   b) vertical shift of the scanned area.
2. A single coil (No.3) with approx. 550 Ω resistance, for image rotation (alignment of the x-trace with the x-lines of the graticule).

Orthogonality and shift

The change in the angle between the traces and the shift of the scanned area will be proportional to the algebraic sum and the algebraic difference of the currents in the coils No.1 and 2.
Under typical operating conditions and with the coil unit closely surrounded by a mu-metal shield, the currents required are max. 5 mA per degree of angle correction and max. 2 mA per millimeter shift. The supply circuit for these coils should be so designed that in each coil a maximum current of 20 mA, with either polarity, can be produced.

If a wider mu-metal shield is used the above-mentioned values have to be multiplied by a factor K ($1 < K < 2$) the value of which depends on the dimensions of the shield and approaches 2 for the case no shield is present.

Image rotation

Under typical operating conditions, a current of max. 45 mA will be required for the alignment.

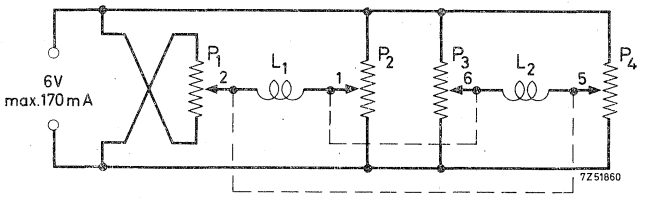

Fig.1

With the above circuit almost independent control for shift and angle correction is achieved. This facilitates the correct adjustment to a great extent.
The dissipation in the potentiometers can be reduced considerably if the requirement of independent controls is dropped.

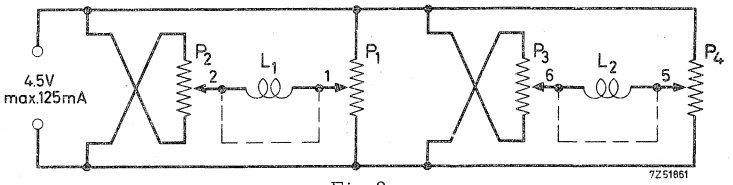

Fig.2

P_1, P_2 potentiometers 220 Ω, 1 watt: ganged
P_3, P_4 potentiometers 220 Ω, 1 watt: ganged

A further reduction of the dissipation can be obtained by providing a commutator for each coil (see circuit fig.3).
The procedure of adjustment will then become more complicated but it should be kept in mind that a readjustment is necessary only when the tube has to be replaced.

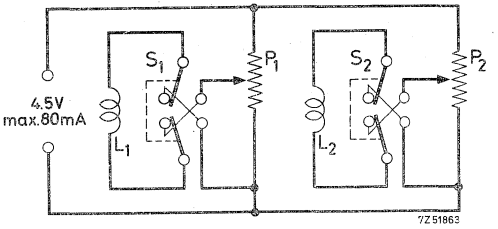

Fig.3

P_1, P_2 potentiometers 220 Ω, 1 watt
S_1, S_2 commutators

A suitable circuit for the image rotating coil is given in fig.4.

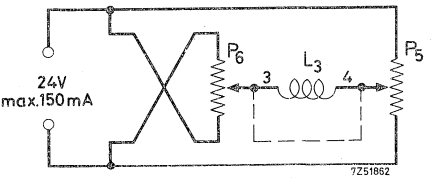

Fig.4

P_5, P_6 potentiometers 500 Ω, 3 watt: ganged

The following procedure of adjustment is recommended

a. Align the x-trace with the graticule by means of the image rotating coil.
b. With the tube fully scanned in the vertical direction, the image has to be shifted so that the graticule is fully covered. With the circuit according to fig.1 this is done by means of the ganged potentiometers P_1 and P_4.
c. Adjustment of orthogonality by means of the ganged potentiometers P_2 and P_3. A slight readjustment of P_1 and P_4 may be necessary afterwards.
d. Readjustment of the image rotation if necessary.

With a circuit according to fig.2 or 3 these corrections have to be performed by means of successive adjustments of the currents in the coils.

The most convenient deflection signal is a square waveform permitting an easy and fairly accurate visual check of orthogonality.

ILLUMINATION OF THE GRATICULE

To illuminate the internal graticule a light conductor (e.g. of perspex) should be used. In order to achieve the most efficient light conductance, the holes for the lamps and the edge adjacent to the tube should be polished, and the distance between the perspex plate and the tube should be as small as possible. It is advisable to apply reflective material to the outer circumference and, if possible, also to the upper and lower faces of the light conductor. The thickness of the conductor should not exceed 3 mm, and its position relative to the frontplate of the tube should be adjusted for optimum illumination of the graticule lines.

INSTRUMENT CATHODE-RAY TUBE

14 cm diagonal, rectangular flat faced oscilloscope tube with mesh and metal backed screen.

QUICK REFERENCE DATA			
Final accelerator voltage	$V_{g7(\ell)}$	10	kV
Display area		100 x 80	mm^2
Deflection coefficient, horizontal	M_x	15,5	V/cm
vertical	M_y	4,2	V/cm

SCREEN: Metal backed phosphor

	Colour	Persistence
D14-120GH	green	medium short

Useful screen area	>	100 x 80	mm^2
Useful scan at $V_{g7(\ell)}/V_{g2,g4}$ = 6,7 , horizontal	>	100	mm
vertical	>	80	mm
Spot eccentricity in horizontal and vertical directions	<	6	mm

HEATING: Indirect by a.c. or d.c.; parallel supply

Heater voltage	V_f	6,3	V
Heater current	I_f	300	mA

MECHANICAL DATA

Dimensions and connections

See also outline drawing

Overall length (socket included)	<	385	mm
Face dimensions	<	100 x 120	mm
Net mass	approx.	900	g

Base 14-pin all-glass

Dimensions in mm

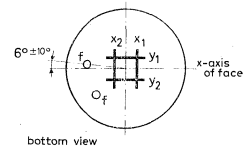

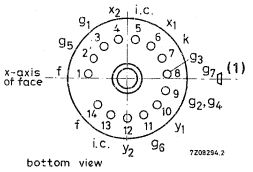

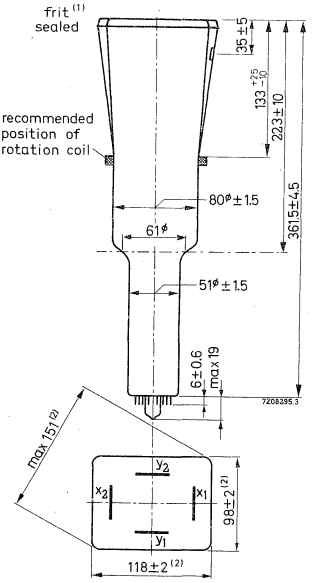

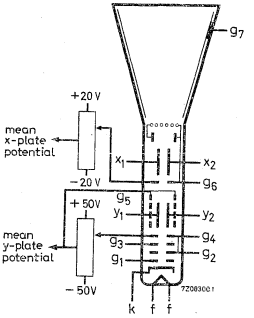

(1) The centre of the contact is located within a square of 10 mm x 10 mm around the true geometrical position.
(2) The bulge at the frit seal may increase the indicated maximum dimensions by not more than 2 mm.

Mounting position any

The tube should not be supported by the base alone; under no circumstances should the socket be allowed to support the tube.

Accessories

Socket (supplied with tube)	type 55566
Final accelerator contact connector	type 55563A
Mu-metal shield	type 55581

FOCUSING	electrostatic
DEFLECTION	double electrostatic
x plates	symmetrical
y plates	symmetrical

If use is made of the full deflection capabilities of the tube the deflection plates will intercept part of the electron beam; hence a low impedance deflection plate drive is desirable.

Angle between x and y traces $90^{o} \pm 1^{o}$

Angle between x trace and the horizontal axis of the face $< 5^{o}$ [1]).

LINE WIDTH

Measured with the shrinking raster method under typical operating conditions, adjusted for optimum spot size at a beam current $I_{\ell} = 10\ \mu A$.

Line width at the centre of the screen	l.w.	0,40	mm
over the whole screen area	l.w. av. <	0,45	mm

CAPACITANCES

x_1 to all other elements except x_2	$C_{x1(x2)}$	6,5	pF
x_2 to all other elements except x_1	$C_{x2(x1)}$	6,5	pF
y_1 to all other elements except y_2	$C_{y1(y2)}$	5,0	pF
y_2 to all other elements except y_1	$C_{y2(y1)}$	5,0	pF
x_1 to x_2	C_{x1x2}	2,2	pF
y_1 to y_2	C_{y1y2}	1,7	pF
Control grid to all other elements	C_{g1}	5,5	pF
Cathode to all other elements	C_{k}	4,5	pF

[1]) To align the x trace with the horizontal axis of the screen, the whole picture can be rotated by means of a rotation coil. This coil will have 50 ampere turns for the indicated maximum rotation of 5° and should be positioned as indicated in the drawing.

TYPICAL OPERATING CONDITIONS

Final accelerator voltage	$V_{g7(\ell)}$		10	kV
Interplate shield voltage	V_{g6}		1500	V
Geomrty control voltage	ΔV_{g6}		±15	V [1]
Deflection plate shield voltage	V_{g5}		1500	V [2]
Focusing electrode voltage	V_{g3}	250 to	350	V
First accelerator voltage	$V_{g2, g4}$		1500	V
Astigmatism control voltage	$\Delta V_{g2, g4}$		±50	V [3]
Control voltage for visual extinction of focused spot	V_{g1}	-20 to	-60	V
Grid drive for 10 µA screen current		approx.	12	V
Deflection coefficient, horizontal	M_x		15,5	V/cm
		<	16	V/cm
vertical	M_y		4,2	V/cm
		<	4,6	V/cm
Deviation of linearity of deflection		<	2	% [4]
Geometry distortion		See note 5		
Useful scan, horizontal		>	100	mm
vertical		>	80	mm

LIMITING VALUES (Absolute max. rating system)

Final accelerator voltage	$V_{g7(\ell)}$	max.	11	kV
		min.	9	kV
Interplate shield voltage and geometry control electrode voltage	V_{g6}	max.	2200	V
Deflection plate shield voltage	V_{g5}	max.	2200	V
Focusing electrode voltage	V_{g3}	max.	2200	V
First accelerator and astigmatism control electrode voltage	$V_{g2, g4}$	max.	2200	V
		min.	1350	V
Control grid voltage,	$-V_{g1}$	max.	200	V
		min.	0	V
Cathode to heater voltage	V_{kf}	max.	125	V
	$-V_{kf}$	max.	125	V
Voltage between astigmatism control electrode and any deflection plate	$V_{g4/x}$	max.	500	V
	$V_{g4/y}$	max.	500	V
Grid drive, average		max.	20	V
Screen dissipation	W_ℓ	max.	8	mW/cm^2
Ratio $V_{g7(\ell)}/V_{g2, g4}$	$V_{g7(\ell)}/V_{g4}$	max.	6,7	

Notes see page 5

Notes

1. This tube is designed for optimum performance when operating at a ratio $V_{g7(\ell)}/V_{g2,\ g4} = 6{,}7$. The geometry electrode voltage should be adjusted within the indicated range (values with respect to the mean x-plate potential). A negative control voltage will cause some pincushion distortion and less background light, a positive control voltage will give some barrel distortion and a slight increase of background light.
2. The deflection plate shield voltage should be equal to the mean y-plate potential. The mean x-plate and y-plate potentials should be equal for optimum spot quality.
3. The astigmatism control electrode voltage should be adjusted for optimum spot shape. For any necessary adjustment its potential will be within the stated range.
4. The sensitivity at a deflection of less than 75% of the useful scan will not differ from the sensitivity at a deflection of 25% of the useful scan by more than the indicated value.
5. A graticule, consisting of concentric rectangles of 95 mm x 75 mm and 93 mm x 73,6 mm is aligned with the electrical x-axis of the tube. With optimum correction potentials applied a raster will fall between these rectangles.

INSTRUMENT CATHODE-RAY TUBE

14 cm diagonal, rectangular flat-faced oscilloscope tube with mesh and metal backed screen. The tube has side connections to the x- and y-plates, and is intended for use in transistorized oscilloscopes up to a frequency of 50 MHz.

QUICK REFERENCE DATA			
Final accelerator voltage	$V_{g8(\ell)}$	10	kV
Display area		100 x 80	mm^2
Deflection coefficient, horizontal	M_x	15,5	V/cm
vertical	M_y	4,2	V/cm

SCREEN : Metal backed phosphor

	Colour	Persistence
D14-121GH	green	medium short

Useful screen area	>	100 x 80	mm^2
Useful scan at $V_{g8(\ell)}/V_{g2, g4}$ = 6,7, horizontal	>	100	mm
vertical	>	80	mm
Spot eccentricity in horizontal and vertical directions	<	6	mm

HEATING

Indirect by a.c. or d.c.; parallel supply

Heater voltage	V_f	6,3	V
Heater current	I_f	300	mA

MECHANICAL DATA

Dimensions in mm

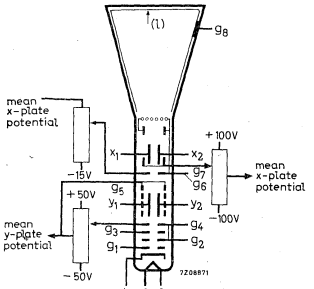

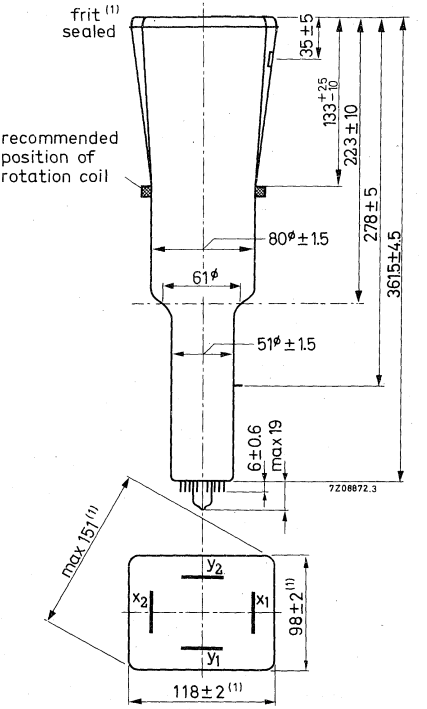

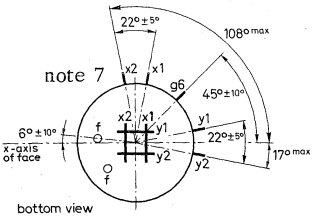

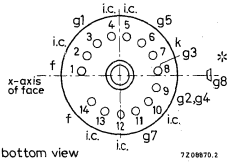

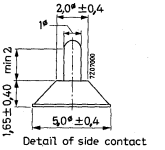

(1) The bulge at the frit seal may increase the indicated maximum dimensions by not more than 2 mm.

* The centre of the contact is located within a square of 10 mm x 10 mm around the true geometrical position.

Mounting position: any

The tube should not be supported by the base alone and under no circumstances should the socket be allowed to support the tube.

Dimensions and connections

See also outline drawing			
Overall length (socket included)	<	385	mm
Face dimensions	<	100 x 120	mm
Net mass	approx.	900	g
Base	14-pin all glass		
Accessories			
Socket (supplied with tube)	type	55566	
Final accelerator contact connector	type	55563A	
Mu-metal shield	type	55581A	

CAPACITANCES

x_1 to all other elements except x_2	$C_{x1(x2)}$	5,5	pF
x_2 to all other elements except x_1	$C_{x2(x1)}$	5,5	pF
y_1 to all other elements except y_2	$C_{y1(y2)}$	4	pF
y_2 to all other elements except y_1	$C_{y2(y1)}$	4	pF
x_1 to x_2	C_{x1x2}	2,2	pF
y_1 to y_2	C_{y1y2}	1,7	pF
Control grid to all other elements	C_{g1}	5,5	pF
Cathode to all other elements	C_k	4,5	pF

FOCUSING	electrostatic
DEFLECTION	double electrostatic
x plates	symmetrical
y plates	symmetrical

If use is made of the full deflection capabilities of the tube the deflection plates will intercept part of the electron beam; hence a low impedance deflection plate drive is desirable.

Angle between x and y traces	90 ± 1°	
Anglr between x trace and the horizontal axis of the face	$< 5^o$	[1])

LINE WIDTH

Measured with the shrinking raster method under typical operating conditions, adjusted for optimum spot size at a beam current I_ℓ = 10 μA.

Line width at screen centre	l.w.	0,40	mm
over the whole screen area	l.w. av. <	0,45	mm

Notes see page 5

TYPICAL OPERATING CONDITIONS

Final accelerator voltage	$V_{g_8(\ell)}$		10	kV
Geometry-control electrode voltage	V_{g_7}		1500 ± 100	V [2]
Post deflection and interplate shield voltage	V_{g_6}		1500	V
Background illumination control voltage	ΔV_{g_6}		0 to -15	V [2]
Deflection plate shield voltage	V_{g_5}		1500	V [3]
Focusing electrode voltage	V_{g_3}		250 to 350	V
First accelerator voltage	V_{g_2,g_4}		1500	V
Astigmatism control voltage	$\Delta V_{g_2,g_4}$		±50	V [4]
Control grid voltage for extinction of focused spot	V_{g_1}		-20 to -60	V
Grid drive for 10 μA screen current		approx.	12	V
Deflection coefficient, horizontal	M_x	av.	15,5	V/cm
		<	16	V/cm
vertical	M_y	av.	4,2	V/cm
		<	4,6	V/cm
Deviation of linearity of deflection		<	2	% [5]
Geometry distortion			See note 6	
Useful scan, horizontal		>	100	mm
vertical		>	80	mm

LIMITING VALUES (Absolute max. rating system)

Final accelerator voltage	$V_{g_8(\ell)}$	max.	11	kV
		min.	9	kV
Post deflection and interplate shield voltage and geometry control electrode voltage	V_{g_7}, V_{g_6}	max.	2200	V
Deflection plate shield voltage	V_{g_5}	max.	2200	V
Focusing electrode voltage	V_{g_3}	max.	2200	V
First accelerator and astigmatism control electrode voltage	V_{g_2,g_4}	max.	2200	V
		min.	1350	V
Control grid voltage	$-V_{g_1}$	max.	200	V
		min.	0	V
Cathode to heater voltage	V_{kf}	max.	125	V
	$-V_{kf}$	max.	125	V
Voltage between astigmatism control electrode and any deflection plate	$V_{g_4/x}$	max.	500	V
	$V_{g_4/y}$	max.	500	V
Grid drive, average		max.	20	V
Screen dissipation	W_ℓ	max.	8	mW/cm^2
Ratio $V_{g_8(\ell)}/V_{g_2,g_4}$	$V_{g_8(\ell)}/V_{g_2,g_4}$	max.	6,7	

For notes see page 5

NOTES

1) In order to align the x-trace with the horizontal axis of the screen, the whole picture can be rotated by means of a rotation coil. This coil will have 50 amp. turns for the indicated max. rotation of 5° and should be positioned as indicated on the drawing.

2) This tube is designed for optimum performance when operating at a ratio $V_{g8(\ell)} / V_{g2,g4} = 6,7$
The geometry control voltage V_{g7} should be adjusted within the indicated range (values with respect to the mean x-plate potential).
A negative control voltage on g_6 (with respect to the mean x-plate potential) will cause some pincushion distortion and less background light.
By the use of the two voltages, V_{g6} and V_{g7}, it is possible to find the best compromise between background light and raster distortion.

3) The deflection plate shield voltage should be equal to the mean y-plate potential. The mean x- and y-plate potentials should be equal for optimum spot quality.

4) The astigmatism control electrode voltage should be adjusted for optimum spot shape. For any necessary adjustment its potential will be within the stated range.

5) The sensitivity at a deflection of less than 75% of the useful scan will not differ from the sensitivity at a deflection of 25% of the useful scan by more than the indicated value.

6) A graticule, consisting of concentric rectangles of 95 mm x 75 mm and 93 mm x 73,6 mm is aligned with the electrical x axis of the tube. With optimum correction potentials applied a raster will fall between these rectangles.

7) To avoid damage to the side contacts the narrower end of the Mu-metal shield should have an internal diameter of not less than 64 mm.

INSTRUMENT CATHODE-RAY TUBE

This type is equivalent with type D14-120 GH but provided with a rotation coil as indicated in note 1 of D14-120GH.

COIL

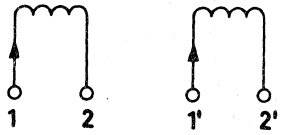

Number of turns	1 - 2	850 turns
	1' - 2'	850 turns
Resistance of coils	1 - 2	360 Ω + 10 %
	1' - 2'	375 Ω 10 %

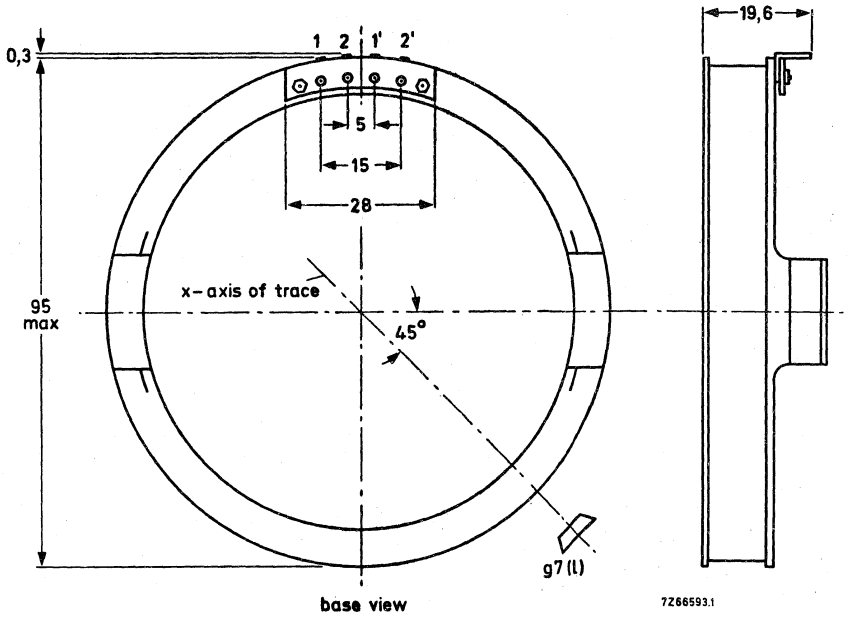

INSTRUMENT CATHODE-RAY TUBE

This type is equivalent with type D14-121GH but provided with a rotation coil as indicated in note 1 of D14-121GH.

COIL

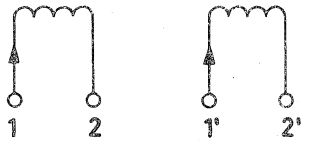

Number of turns	1 -2	850 turns
	1'-2'	850 turns
Resistance of coils	1 -2	360 Ω (±10 %)
	1'-2'	375 Ω (±10 %)

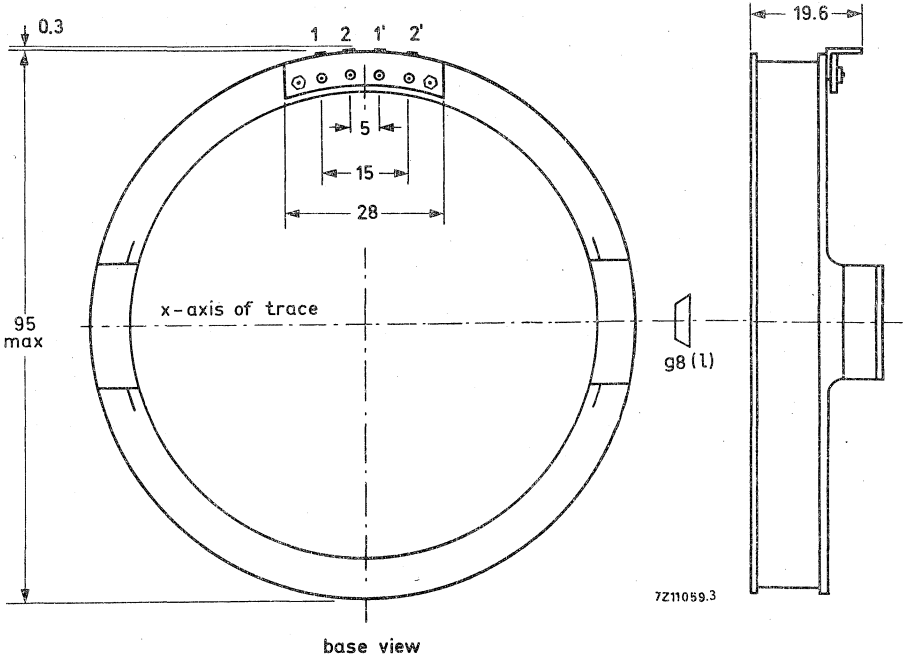

INSTRUMENT CATHODE-RAY TUBE

14 cm diagonal, rectangular flat faced oscilloscope tube with mesh and metal-backed screen. The tube has side connections to the x and y-plates and an internal graticule.

QUICK REFERENCE DATA			
Final accelerator voltage	$V_{g8(\ell)}$	10	kV
Display area		100 x 80	mm^2
Deflection coefficient, horizontal	M_x	15, 2	V/cm
vertical	M_y	4, 1	V/cm

SCREEN : Metal-backed phosphor

	Colour	Persistence
D14-162GH/09	green	medium-short

Useful screen area	>	100 x 80	mm^2
Useful scan at $V_{g8(\ell)}/V_{g2, g4} = 6, 7$, horizontal	>	100	mm
vertical	>	80	mm
Spot eccentricity in horizontal direction	<	6	mm

The x-trace can be aligned with the x-lines of the graticule by means of correction coils fitted around the tube by the manufacturer (see page 5).

HEATING : Indirect by a.c. or d.c.; parallel supply

Heater voltage	V_f	6, 3	V
Heater current	I_f	300	mA

MECHANICAL DATA

Dimensions and connections

See also outline drawing

Overall length (socket included)	<	407, 5	mm
Face dimensions	<	100 x 120	mm
Net mass	approx.	1200	g

Dimensions in mm

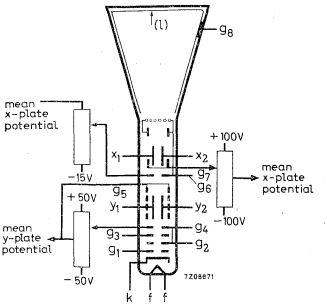

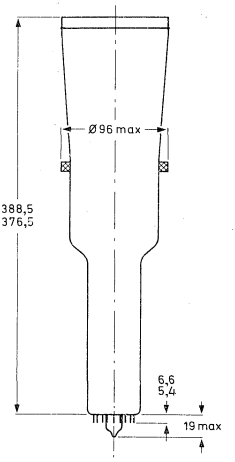

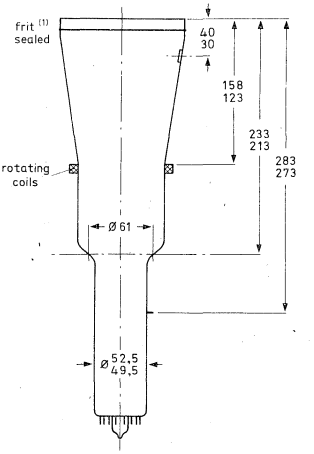

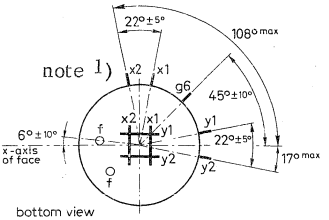

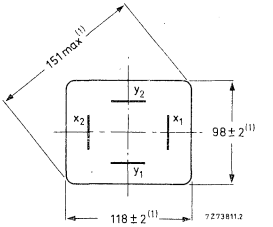

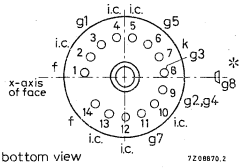

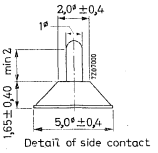

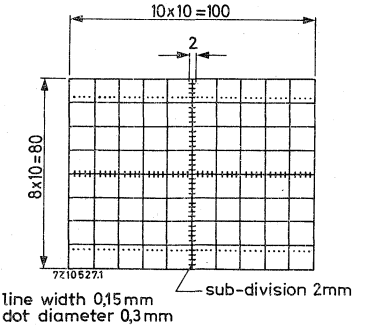

(1) The bulge at the frit seal may increase the indicated maximum dimensions by not more than 2 mm.

* The centre of the contact is situated within a square of 10 mm x 10 mm around the true geometrical position.

Base 14 pin all glass

Mounting position : any

The tube should not be supported by the base alone and under no circumstances should the socket be allowed to support the tube.

Accessories

Socket (supplied with tube)	type 55566	
Final accelerator contact connector	type 55563A	
Mu-metal shield	type 55585	[1]

FOCUSING	electrostatic
DEFLECTION	double electrostatic
x-plates	symmetrical
y-plates	symmetrical

If use is made of the full deflection capabilities of the tube the deflection plates will intercept part of the electron beam; hence a low impedance deflection plate drive is desirable.

Angle between x and y-traces $90^o \pm 1^o$

Angle between x-trace and the horizontal axis of the face 0° See page 5 "Correction coils"

LINE WIDTH

Measured with the shrinking raster method in the centre of the screen under typical operating conditions, adjusted for optimum spot size at a beam current $I_\ell = 10\ \mu A$.

Line width at the centre of the screen	l.w.	0,3	mm

CAPACITANCES

x_1 to all other elements except x_2	$C_{x1(x2)}$	5,5	pF
x_2 to all other elements except x_1	$C_{x2(x1)}$	5,5	pF
y_1 to all other elements except y_2	$C_{y1(y1)}$	3,5	pF
y_2 to all other elements except y_1	$C_{y2(y1)}$	3,5	pF
x_1 to x_2	C_{x1x2}	2	pF
y_1 to y_2	C_{y1y2}	1,6	pF
Control grid to all other elements	C_{g1}	5,5	pF
Cathode to all other elements	C_k	4	pF

[1]) See page 5.

TYPICAL OPERATING CONDITIONS

Final accelerator voltage	$V_{g8(\ell)}$	10	kV	
Geometry control electrode voltage	V_{g7}	1500 ± 100	V	2)
Post deflection and interplate shield voltage	V_{g6}	1500	V	
Background illumination control voltage	ΔV_{g6}	0 to -15	V	2)
Deflection plate shield voltage	V_{g5}	1500	V	3)
Focusing electrode voltage	V_{g3}	450 to 550	V	
First accelerator voltage	$V_{g2, g4}$	1500	V	
Astigmatism control voltage	$\Delta V_{g2, g4}$	±50	V	4)
Control grid voltage for visual extinction of focused spot	V_{g1}	-30 to -70	V	
Grid drive for 10 μA screen current		approx. 20	V	
Deflection coefficient, horizontal	M_x	15, 2	V/cm	
		< 16	V/cm	
vertical	M_y	4, 1	V/cm	
		< 4, 4	V/cm	
Deviation of linearity of deflection		< 2	%	5)
Geometry distortion		See note 6		
Useful scan, horizontal		> 100	mm	
vertical		> 80	mm	

LIMITING VALUES (Absolute max. rating system)

Final accelerator voltage	$V_{g8(\ell)}$	max.	13	kV
		min.	9	kV
Post deflection and interplate shield voltage and geometry control electrode voltage	V_{g7}, V_{g6}	max.	2200	V
Deflection plate shield voltage	V_{g5}	max.	2200	V
Focusing electrode voltage	V_{g3}	max.	2200	V
First accelerator and astigmatism control electrode voltage	$V_{g2, g4}$	max.	2200	V
		min.	1350	V
Control grid voltage	$-V_{g1}$	max.	200	V
		min.	0	V
Cathode to heater voltage	V_{kf}	max.	125	V
	$-V_{kf}$	max.	125	V
Voltage between astigmatism control electrode and any deflection plate	$V_{g4/x}$	max.	500	V
	$V_{g4/y}$	max.	500	V
Grid drive, average		max.	30	V
Screen dissipation	W_ℓ	max.	8	mW/cm^2
Ratio $V_{g8(\ell)}/V_{g2, g4}$	$V_{g8(\ell)}/V_{g2, g4}$	max.	6, 7	

Notes see page 5.

NOTES

1) To avoid damage to the side contacts the narrower end of the mu-metal shield should have an internal diameter of not less than 64 mm.

2) This tube is designed for optimum performance when operating at a ratio $V_{g8(\ell)}/V_{g2g4}$ $V_{g8(\ell)}/V_{g2,\,g4} = 6,7$.
The geometry control voltage V_{g7} should be adjusted within the indicated range (values with respect to the mean x-plate potential).
A negative control voltage on g_6 (with respect to the mean x-plate potential) will cause some pincushion distortion and less background light.
By the use of two voltages, V_{g6} and V_{g7}, it is possible to find the best compromise between background light and raster distortion.
If a fixed voltage on V_{g6} is required this voltage should be 10 V lower than the mean x-plate potential.

3) The deflection plate shield voltage should be equal to the mean y-plate potential.
The mean x and y-plate potentials should be equal for optimum spot quality.

4) The astigmatism control electrode voltage should be adjusted for optimum spot shape.
For any necessary adjustment its potential will be within the stated range.

5) The sensitivity at a deflection of less than 75% of the useful scan will not differ from the sensitivity at a deflection of 25% of the useful scan by more than the indicated value.

6) A graticule, consisting of concentric rectangles of 95 mm x 75 mm and 93 mm x 73,6 mm is aligned with the electrical x-axis of the tube. With optimum corrections applied a a raster will fall between these rectangles.

CORRECTION COILS

General

The D14-1626H/09 is provided with a pair of coils L1 and L2 for image rotation which enable the alignment of the x-trace with the x-lines of the graticule.

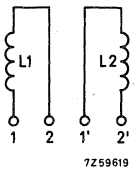

The image rotation coils are wound concentrically around the tube neck.
Under typical operating conditions 50 ampere-turns are required for the maximum rotation of 5°. Both coils have 850 turns. This means that a current of < 30 mA per coil is required which can be obtained by using a 24 V supply when the coils are connected in series, or a 12 V supply when they are in parallel.

Connecting the coils

The coils have been connected to the 4 soldering tags as follows:

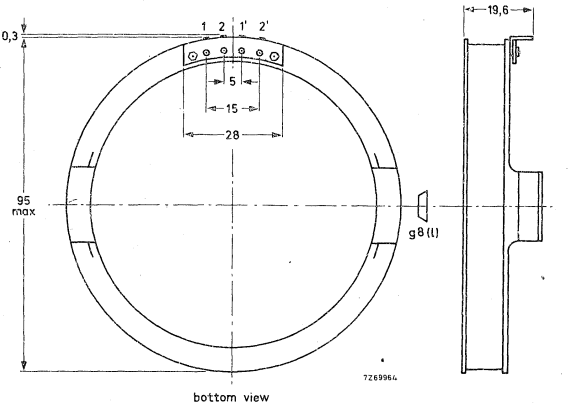

INSTRUMENT CATHODE-RAY TUBE

14 cm diagonal rectangular flat-faced oscilloscope tube with domed post-deflection acceleration mesh, sectioned y-plates, and metal-backed screen with internal graticule.

QUICK REFERENCE DATA			
Final accelerator voltage	$V_{g9(\ell)}$	20	kV
Display area		100 x 80	mm^2
Deflection coefficient, horizontal	M_x	9	V/cm
vertical	M_y	3	V/cm

SCREEN

Metal-backed phosphor

	colour	persistence
D14-240GH/37	green	medium short

Useful screen dimensions	>	100 x 80	mm
Spot eccentricity in horizontal and vertical directions	<	6	mm

HEATING

Indirect by a.c. or d.c.; parallel supply

Heater voltage	V_f	6,3	V
Heater current	I_f	300	mA

MECHANICAL DATA

Mounting position: any

The tube should not be supported by the base alone and under no circumstances should the socket be allowed to support the tube.

Dimensions and connections

See also outline drawing

Overall length (socket included)	<	385	mm
Face dimensions	<	120 x 100	mm

MECHANICAL DATA (continued)

Net mass	≈ 900 g
Base	14 pin, all glass
Accessories	
Socket (supplied with tube)	type 55566
Side contact connector (12 required)	type 55561
Final accelerator contact connector	note [1])
Mu-metal shield	note [2])

FOCUSING electrostatic

DEFLECTION double electrostatic

x-plates	symmetrical
y-plates	symmetrical
Angle between x and y traces	90°
Angle between x-trace and x-axis of the internal graticule	0°

See also "Correction coils"

If use is made of the full deflection capabilities of the tube the deflection plates will intercept part of the electron beam; hence a low impedance deflection plate drive is desirable.

CAPACITANCES

x_1 to all other elements except x_2	$C_{x_1(x_2)}$	4,5	pF
x_2 to all other elements except x_1	$C_{x_2(x_1)}$	4,5	pF
$y_{1.1}$ to all other elements except $y_{2.1}$	$C_{y_{1.1}(y_{2.1})}$	1,3	pF
$y_{2.1}$ to all other elements except $y_{1.1}$	$C_{y_{2.1}(y_{1.1})}$	1,3	pF
x_1 to x_2	$C_{x_1x_2}$	3	pF
$y_{1.1}$ to $y_{2.1}$	$C_{y_{1.1}y_{2.1}}$	0,7	pF
Control grid to all other elements	C_{g_1}	5,5	pF
Cathode to all other elements	C_k	4,5	pF

[1]) The connection to the final accelerator electrode is made by means of an EHT cable attached to the tube.

[2]) The diameter of the mu-metal shield should be large enough to avoid damage to the side contacts.

DIMENSIONS AND CONNECTIONS

Dimensions in mm

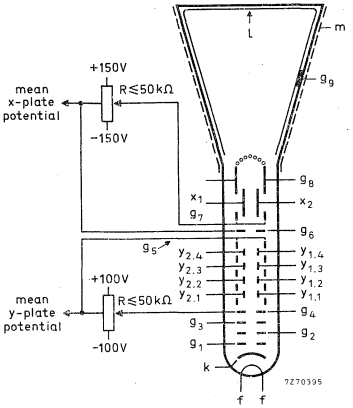

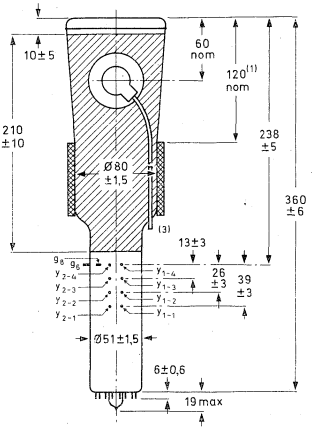

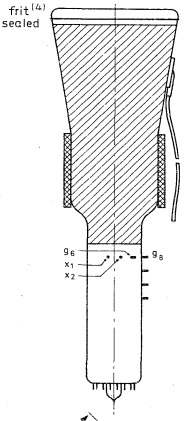

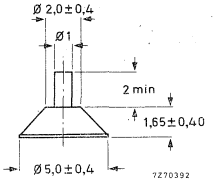

detail of side contact

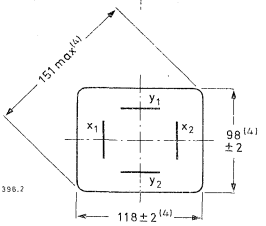

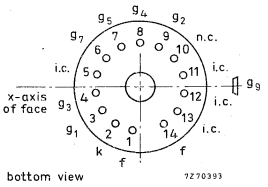

bottom view

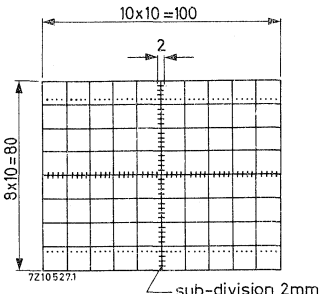

line width 0,15 mm
dot diameter 0,3 mm

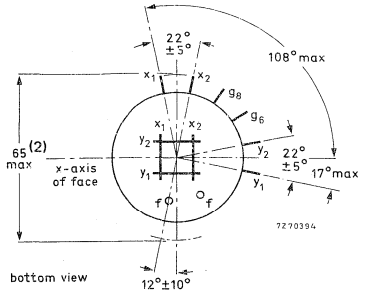

bottom view

12°±10°

(1) Recommended position of correction coils.
(2) See page 2.
(3) Length of cable approx. 460 mm.
(4) The bulge at the frit seal may increase the indicated maximum dimensions by not more than 2 mm.

TYPICAL OPERATION

Conditions

Final accelerator voltage	$V_{g9(\ell)}$	20	kV	
Post deflection accelerator mesh electrode voltage	V_{g8}	2000	V	
Geometry control electrode voltage	V_{g7}	2000 ± 150	V	1)
Interplate shield voltage	V_{g6}	2000	V	2)
Deflection plate shield voltage	V_{g5}	2000	V	3)
Astigmatism control electrode voltage	V_{g4}	2000 ± 100	V	4)
Focusing electrode voltage	V_{g3}	500 to 800	V	
First accelerator voltage	V_{g2}	2000	V	
Control grid voltage for visual extinction of focused spot	V_{g1}	-55 to -110	V	
Voltage on outer conductive coating	V_m	2000	V	

Performance

Useful scan, horizontal		> 100	mm	5)
vertical		> 80	mm	
Deflection coefficient, horizontal	M_x	9	V/cm	
		< 9,9	V/cm	
vertical	M_y	3	V/cm	
		< 3,3	V/cm	
Line width		≈ 0,45	mm	6)
Writing speed		> 1,5	cm/ns	7)
Deviation of linearity of deflection		see note 8	%	
Geometry distortion		see note 9		
Grid drive for 10 μA screen current		≈ 20	V	

---

1) The geometry control electrode voltage V_{g7} should be adjusted within the indicated range (values with respect to the mean x-plate potential).

2) The interplate shield voltage should be equal to the mean x-plate potential.

3) The deflection plate shield voltage should be equal to the mean y-plate potential. The mean x-plate and y-plate potentials should be equal for optimum performance.

4) The astigmatism control electrode voltage should be adjusted for optimum spot shape. For any necessary adjustment its potential will be within the stated range.

5) If the tube is operated at a ratio $V_{g9(\ell)}/V_{g5} < 10$, the useful scan may be smaller than 100 mm x 80 mm.
The scanned raster can be shifted and aligned with the internal graticule by means of correction coils fitted around the tube.

LIMITING VALUES (Absolute maximum rating system)

Final accelerator voltage	$V_{g9(\ell)}$	max.	21 kV
		min.	15 kV
Post deflection acceleration mesh electrode voltage	V_{g8}	max.	2200 V
Geometry control electrode voltage	V_{g7}	max.	2400 V
Interplate shield voltage	V_{g6}	max.	2200 V
Deflection plate shield voltage	V_{g5}	max.	2200 V
Astigmatism control electrode voltage	V_{g4}	max.	2300 V
		min.	1800 V
Focusing electrode voltage	V_{g3}	max.	2200 V
First accelerator voltage	V_{g2}	max.	2200 V
		min.	1900 V
Control grid voltage	$-V_{g1}$	max.	200 V
		min.	0 V
Cathode to heater voltage			
positive	V_{kf}	max.	125 V
negative	$-V_{kf}$	max.	125 V
Voltage between astigmatism control electrode and any deflection plate	$V_{g4/x}$	max.	500 V
	$V_{g4/y}$	max.	500 V
Grid drive, average		max.	30 V
Screen dissipation	W_ℓ	max.	8 mW/cm^2
Ratio V_{g9}/V_{g5}	V_{g9}/V_{g5}	max.	10
		min.	8

6. Measured with the shrinking raster method in the centre of the screen, with corrections adjusted for optimum spot size, at a beam current of 10 μA.
7. Writing speed measuring conditions:

Film	Polaroid 410 (10 000 ASA)
Lens	F 1/1,2
Object to image ratio	1/0,5
Modulation	ΔV_{g1} = 55 V

8. The deflection coefficient over each division will not differ more than 5% from that over any other division; all these deflection coefficients being measured per division along the axes.
9. A graticule consisting of concentric rectangles of 95 mm x 75 mm and 93 mm x 73,6 mm is aligned with the electrical x-axis of the tube. With optimum corrections applied, the edges of a raster will fall between these rectangles.

CORRECTION COILS

On request a correction coil unit can be made available consisting of:

1. a pair of coils L1 and L2 which enable the angle between the x and y traces at the centre of the sceen to be made exactly 90° (orthogonality correction).
2. a pair of coils L3 and L4 which enable the scanned area to be shifted up and down (vertical shift).
3. a coil L5 for image rotation which enables the alignment of the x trace with the x lines of the graticule.

Orthogonality (coils L1 and L2)

The current required under typical operating conditions with mu-metal shield being used is < 8 mA for complete correction of orthogonality.
The resistance of each coil is ≈ 160 Ω.

Shift (coils L3 and L4)

The current required under typical operating conditions with mu-metal shield being used is < 12 mA for a maximum shift of 5 mm.
The resistance of each coil is ≈ 160 Ω.

Image rotation (coil L5)

The image rotation coil is wound concentrically around the tube neck. Under typical operating conditions 27 ampere-turns are required for the maximum rotation of 5^{6}.
The coil has 1560 turns. This means that a current of < 18 mA is required.
The resistance of the coil is ≈ 185 Ω.

INSTRUMENT CATHODE-RAY TUBE

14 cm diagonal rectangular flat faced monoaccelerator oscilloscope tube primarily intended for use in inexpensive oscilloscopes and read-out devices.

QUICK REFERENCE DATA

Accelerator voltage	$V_{g2, g4, g5 (\ell)}$	2000 V
Display area		100 x 80 mm^2
Deflection coefficient		
horizontal	M_x	23 V/cm
vertical	M_y	13,5 V/cm

SCREEN

	colour	persistence
D14-250GH	green	medium short

Useful screen dimensions	⩾	100 x 80 mm^2
Useful scan		
horizontal	⩾	100 mm
vertical	⩾	80 mm
Spot eccentricity in horizontal and vertical directions	<	7 mm

HEATING

Indirect by a.c. or d.c.; parallel supply

Heater voltage	V_f	6,3 V
Heater current	I_f	300 mA

MECHANICAL DATA

Mounting position: any

The tube should not be supported by the base alone and under no circumstances should the socket be allowed to support the tube.

Net mass	approx. 1000 g
Base	14-pin all glass

Dimensions and connections

See also outline drawing

Overall length (socket included)	⩽	333 mm
Face dimensions	⩽	121 x 100 mm

Accessories

Socket (supplied with tube)	type 55566
Mu-metal shield	type 55590

FOCUSING electrostatic

DEFLECTION double electrostatic

x-plates	symmetrical
y-plates	symmetrical

If use is made of the full deflection capabilities of the tube the deflection plates will block part of the electron beam; hence a low impedance deflection plate drive is desirable.

Angle between x and y-traces	$90^o \pm 1^o$
Angle between x-trace and horizontal axis of the face	see footnote

CAPACITANCES

x_1 to all other elements except x_2	$C_{x1(x2)}$	4,5 pF
x_2 to all other elements except x_1	$C_{x2(x1)}$	4,5 pF
y_1 to all other elements except y_2	$C_{y1(y2)}$	3,5 pF
y_2 to all other elements except y_1	$C_{y2(y1)}$	3 pF
x_1 to x_2	C_{x1x2}	2 pF
y_1 to y_2	C_{y1y2}	1,1 pF
Control grid to all other elements	C_{g1}	6 pF
Cathode to all other elements	C_k	5 pF

Note

The tube is provided with a rotation coil, concentrically wound around the tube neck, enabling the alignment of the x-trace with the mechanical x-axis of the screen. The coil has 1000 turns and a resistance of 400 Ω. Under typical operating conditions, max. 30 ampere-turns are required for the max. rotation of 5°. This means the required current is max. 30 mA at a required voltage of 12 V.

DIMENSIONS AND CONNECTIONS

Dimensions in mm

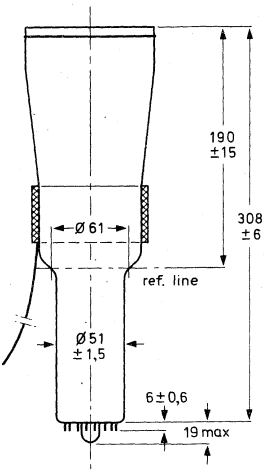

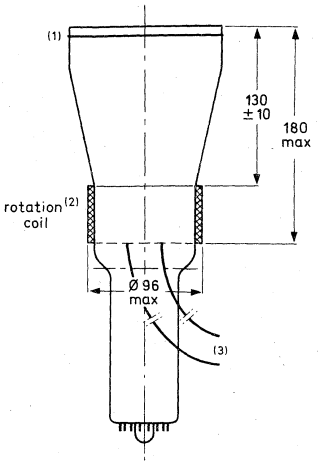

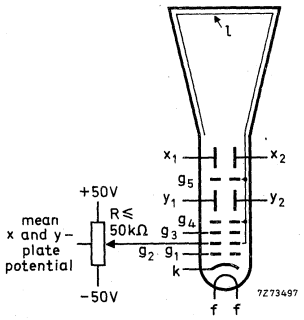

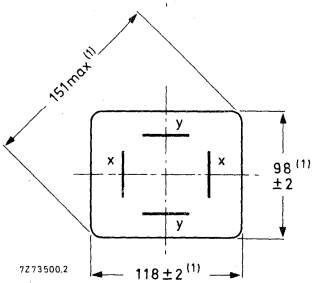

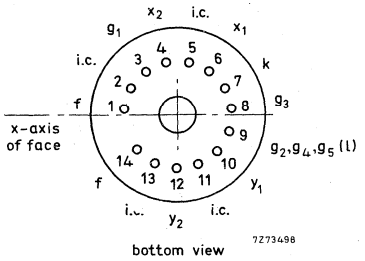

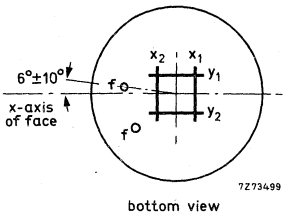

(1) The bulge at the frit seal may increase the indicated maximum dimensions by not more than 2 mm.
(2) The coil is fixed to the envelope by means of adhesive tape.
(3) The length of the connecting leads of the rotation coil is min. 350 mm.

TYPICAL OPERATION

Conditions (note 1)

Accelerator voltage	$V_{g2, g4, g5(\ell)}$		2000 V	
Astigmatism control voltage	$\Delta V_{g2, g4, g5(\ell)}$		± 50 V	(note 2)
Focusing electrode voltage	V_{g3}		220 to 370 V	
Control grid voltage for visual extinction of focused spot	V_{g1}	⩽	−65 V	

Performance

Useful scan				
horizontal		⩾	100 mm	
vertical		⩾	80 mm	
Deflection coefficient				
horizontal	M_x	<	23 V/cm 25 V/cm	
vertical	M_y	<	13,5 V/cm 15 V/cm	
Line width	l.w.	≈	0,35 mm	(note 3)
Deviation of linearity of deflection		⩽	2 %	(note 4)
Geometry distortion		see note 5		
Grid drive for 10 μA screen current		≈	10 V	

LIMITING VALUES (Absolute maximum rating system)

Accelerator voltage	$V_{g2, g4, g5(\ell)}$	max. min.	2200 V 1500 V
Focusing electrode voltage	V_{g3}	max.	2200 V
Control grid voltage	$-V_{g1}$	max. min.	200 V 0 V
Cathode to heater voltage			
positive	V_{kf}	max.	125 V
negative	$-V_{kf}$	max.	125 V
Grid drive, average		max.	20 V
Screen dissipation	W_ℓ	max.	3 mW/cm²

Notes see page 5.

NOTES

1) The mean x-plate potential and the mean y-plate potential should be equal to $V_{g2}, g4, g5(\ell)$ (with astigmatism control voltage set to zero).

2) When putting the tube into operation the astigmatism control voltage should be adjusted only once for optimum spot size in the centre of the screen. The control voltage will be within the stated range, provided the conditions of note 1 are adhered to.

3) Measured with the shrinking raster method in the centre of the screen under typical operating conditions, adjusted for optimum spot size at a beam current I_ℓ = 10 μA.

As the construction of the tube does not permit a direct measurement of the beam current, this current should be determined as follows:
a) under typical operating conditions, apply a small raster display (no overscan), adjust V_{g1} for a beam current of approx. 10 μA and adjust V_{g3} and $V_{g2}, g4, g5(\ell)$ for optimum spot quality at the centre of the screen.
b) under these conditions, but without raster, the deflection plate voltages should be changed to: $V_{y1} = V_{y2}$ = 2000 V; V_{x1} = 1300 V; V_{x2} = 1700 V, thus directing the total beam current to x_2.
Measure the current on x_2 and adjust V_{g1} for I_{x2} = 10 μA.
c) set again for the conditions under a), without touching the V_{g1} control.
The screen current of the resulting raster display is now 10 μA.
d) focus optimally in the centre of the screen (do not adjust the astigmatism control) and measure the line width.

4) The sensitivity at a deflection of less than 75% of the useful scan will not differ from the sensitivity at a deflection of 25% of the useful scan by more than the indicated value.

5) A graticule consisting of concentric rectangles of 95 mm x 75 mm and 93 mm x 73 mm is aligned with the electrical x-axis of the tube. With optimum correction potentials applied a raster will fall between these rectangles.

INSTRUMENT CATHODE-RAY TUBE

14 cm diagonal rectangular flat faced monoaccelerator oscilloscope tube primarily intended for use in inexpensive oscilloscopes and read-out devices. This tube features a low heater power consumption.

QUICK REFERENCE DATA

Accelerator voltage	$V_{g2, g4, g5(\ell)}$	2000 V
Display area		100 x 80 mm^2
Deflection coefficient		
horizontal	M_x	23 V/cm
vertical	M_y	13,5 V/cm

The D14–251GH is equivalent to the type D14–250GH except for the following.

HEATING

Indirect by a.c. or d.c.; parallel supply

Heater voltage	V_f	6,3 V
Heater current	I_f	95 mA

LIMITING VALUES (Absolute maximum rating system)

Cathode to heater voltage			
positive	V_{kf}	max.	100 V
negative	$-V_{kf}$	max.	15 V
Control grid circuit resistance	R_{g1}	max.	1 MΩ

CAPACITANCES

Cathode to all other elements	C_k	2,5 pF

INSTRUMENT CATHODE-RAY TUBE

14 cm diagonal, rectangular flat faced oscilloscope tube with post-deflection acceleration mesh, primarily intended for use in compact oscilloscopes with 15 to 20 MHz bandwidth.

QUICK REFERENCE DATA

Final accelerator voltage	$V_{g7(\ell)}$	4 kV
Display area		100 x 80 mm^2
Deflection coefficient		
horizontal	M_x	19,5 V/cm
vertical	M_y	10,5 V/cm

SCREEN

	colour	persistence
D14-260GH	green	medium short

Useful screen dimensions	$\geqslant$	100 x 80 mm^2
Useful scan		
horizontal	$\geqslant$	100 mm
vertical	$\geqslant$	80 mm
Spot eccentricity in horizontal and vertical directions	$\leqslant$	6,5 mm

HEATING

Indirect by a.c. or d.c.; parallel supply		
Heater voltage	V_f	6,3 V
Heater current	I_f	300 mA

MECHANICAL DATA

Mounting position: any

The tube should not be supported by the base alone and under no circumstances should the socket be allowed to support the tube.

Net mass	approx. 1050 g
Base	14-pin, all glass
Final accelerator contact	small ball (JEDEC J1–25)

Dimensions and connections

See also outline drawing

Overall length	≤	333 mm
Face dimensions	≤	100 x 120 mm^2

Accessories

Socket, supplied with tube	type 55566
Mu-metal shield	type 55591
Final accelerator contact connector	type 55569

FOCUSING electrostatic

DEFLECTION double electrostatic

x-plates		symmetrical
y-plates		symmetrical
Angle between x and y-traces		90 ± 1°
Angle between x-trace and horizontal axis of the face	≤	5° *

If use is made of the full deflection capabilities of the tube the deflection plates will block part of the electron beam, hence a low impedance deflection plate drive is desirable.

CAPACITANCES

x_1 to all other elements except x_2	$C_{x1(x2)}$	7 pF
x_2 to all other elements except x_1	$C_{x2(x1)}$	6,5 pF
y_1 to all other elements except y_2	$C_{y1(y2)}$	4 pF
y_2 to all other elements except y_1	$C_{y2(y1)}$	3,5 pF
x_1 to x_2	C_{x1x2}	2,2 pF
y_1 to y_2	C_{y1y2}	1,1 pF
Control grid to all other elements	C_{g1}	6,1 pF
Cathode to all other elements	C_k	5 pF

* The tube is provided with a rotation coil, concentrically wound around the tube neck, enabling the alignment of the x-trace with the mechanical x-axis of the screen. The coil has 1000 turns and a resistance of max. 400 Ω. Under typical operating conditions, max. 30 ampere-turns are required for the max. rotation of 5°. This means the required current is max. 30 mA at a required voltage of max. 12 V.

Notes to the drawings on opposite page.

1. The bulge at the frit seal may increase the indicated maximum dimensions by not more than 2 mm.
2. The coil is fixed to the envelope by means of adhesive tape.
3. The centre of the contact is situated within a square of 10 mm x 10 mm around the true geometrical position.
4. The length of the connecting leads of the rotation coil is min. 350 mm.

DIMENSIONS AND CONNECTIONS

Dimensions in mm

For notes to the drawings see bottom of opposite page.

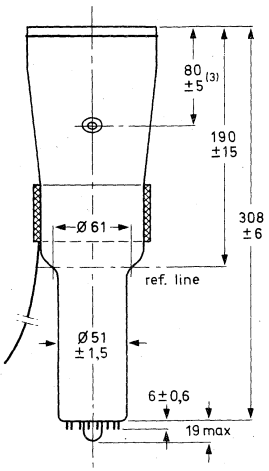

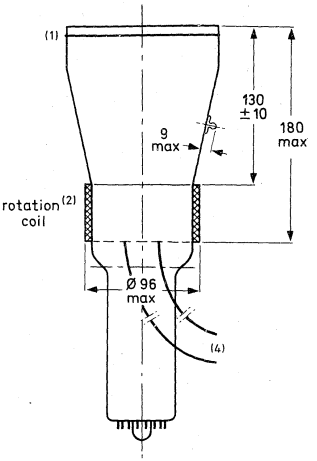

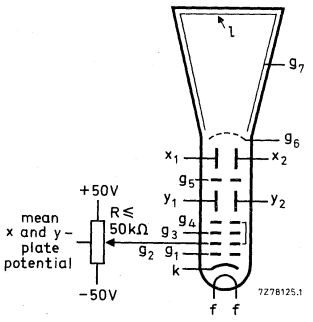

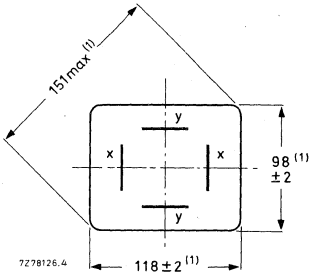

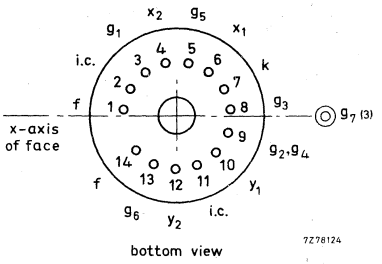

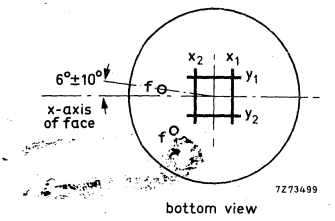

TYPICAL OPERATION

Conditions

Final accelerator voltage	$V_{g7(\ell)}$		4 kV	
Post deflection accelerator mesh electrode voltage	V_{g6}		2000 V	
Interplate shield voltage	V_{g5}		2000 V	(note 1)
First accelerator voltage	$V_{g2, g4}$		2000 V	
Astigmatism control electrode voltage	$\Delta V_{g2, g4}$		± 50 V	(note 2)
Focusing electrode voltage	V_{g3}		300 to 480 V	
Control grid voltage for visual extinction of focused spot	V_{g1}		−30 to −70 V	

Performance

Useful scan				
horizontal		⩾	100 mm	(note 3)
vertical		⩾	80 mm	(note 3)
Deflection coefficient				
horizontal	M_x		19,5 V/cm	
		⩽	21,5 V/cm	
vertical	M_y		10,5 V/cm	
		⩽	11,6 V/cm	
Line width	l.w.	≈	0,35 mm	(note 4)
Deviation of linearity of deflection		⩽	2 %	(note 5)
Grid drive for 10 μA screen current		≈	20 V	
Geometry distortion	see note 6			

NOTES

1. The interplate shield voltage should be equal to the mean x-plate potential. The mean x-plate and y-plate potentials should be equal for optimum spot quality.
2. The astigmatism control electrode voltage should be adjusted for optimum spot shape. For any necessary adjustment its potential will be within the stated range.
3. The tube is designed for optimum performance when operating at a ratio $V_{g7(\ell)}/V_{g2, g4} = 2$. If this ratio is smaller than 2, the useful scan may be smaller than 100 mm x 80 mm.
4. Measured with the shrinking raster method in the centre of the screen with corrections adjusted for optimum spot size, at a beam current of 10 μA.
5. The sensitivity at a deflection of less than 75% of the useful scan will not differ from the sensitivity at a deflection of 25% of the useful scan by more than the indicated value.
6. A graticule consisting of concentric rectangles of 95 mm x 75 mm and 93 mm x 73 mm is aligned with the electrical x-axis of the tube. With optimum corrections applied, the edges of a raster will fall between these rectangles.

LIMITING VALUES (Absolute maximum rating system)

Final accelerator voltage	$V_{g7(\ell)}$	max.	4,4 kV
		min.	3 kV
Post deflection accelerator mesh electrode voltage	V_{g6}	max.	2200 V
Interplate shield voltage	V_{g5}	max.	2200 V
First accelerator and astigmatism control electrode voltage	$V_{g2, g4}$	max.	2200 V
		min.	1500 V
Focusing electrode voltage	V_{g3}	max.	2200 V
Control grid voltage	$-V_{g1}$	max.	200 V
		min.	0 V
Cathode to heater voltage			
positive	V_{kf}	max.	125 V
negative	$-V_{kf}$	max.	125 V
Grid drive, average		max.	20 V
Screen dissipation	W_ℓ	max.	3 mW/cm^2
Control grid circuit resistance	R_{g1}	max.	1 MΩ

INSTRUMENT CATHODE-RAY TUBE

14 cm diagonal, rectangular flat faced oscilloscope tube with post-deflection acceleration mesh, primarily intended for use in compact oscilloscopes with 15 to 20 MHz bandwidth. This tube features a low heater consumption.

QUICK REFERENCE DATA

Final accelerator voltage	$V_{g7(\ell)}$	4	kV
Display area		100 x 80	mm^2
Deflection coefficient			
horizontal	M_x	19,5	V/cm
vertical	M_y	10,5	V/cm

The D14-261GH is equivalent to the type D14-260GH except for the following.

HEATING

Indirect by a.c. or d.c.; parallel supply

Heater voltage	V_f	6,3	V
Heater current	I_f	95	mA

LIMITING VALUES (Absolute maximum rating system)

Cathode to heater voltage				
positive	V_{kf}	max.	100	V
negative	$-V_{kf}$	max.	15	V
Control grid circuit resistance	R_{g1}	max.	1	MΩ

CAPACITANCES

Cathode to all other elements	C_k	2,5	pF

INSTRUMENT CATHODE-RAY TUBE

14 cm diagonal rectangular flat-faced oscilloscope tube with domed post-deflection acceleration mesh and metal-backed screen, primarily intended for use in compact oscilloscopes with 25 to 50 MHz bandwidth.

QUICK REFERENCE DATA

Final accelerator voltage	$V_{g8(\ell)}$	10 kV
Display area		100 x 80 mm^2
Deflection coefficient		
horizontal	M_x	12,8 V/cm
vertical	M_y	6,3 V/cm

SCREEN

Metal-backed phosphor

	colour	persistence
D14-290GH	green	medium short

Useful screen dimensions	$\geqslant$	100 x 80 mm^2
Useful scan		
horizontal	$\geqslant$	100 mm
vertical	$\geqslant$	80 mm
Spot eccentricity in horizontal and vertical directions	$\leqslant$	6,5 mm

HEATING

Indirect by a.c. or d.c.; parallel supply

Heater voltage	V_f	6,3 V
Heater current	I_f	300 mA

MECHANICAL DATA

Mounting position: any

The tube should not be supported by the base alone and under no circumstances should the socket be allowed to support the tube.

Net mass	approx. 1000 g
Base	14 pin, all glass
Final accelerator contact	small ball (JEDEC J1-25)

Dimensions and connections

See also outline drawing

Overall length	⩽	343 mm
Face dimensions	⩽	100 x 120 mm² (note 1)

Accessories

Socket, supplied with tube	type 55566
Mu-metal shield	type 55592
Final accelerator contact connector	type 55569

FOCUSING electrostatic

DEFLECTION double electrostatic

x-plates		symmetrical
y-plates		symmetrical
Angle between x and y-traces		90 ± 1°
Angle between x-trace and horizontal axis of the face	⩽	5° *

If use is made of the full deflection capabilities of the tube the deflection plates will block part of the electron beam, hence a low impedance deflection plate drive is desirable.

CAPACITANCES

x_1 to all other elements except x_2	$C_{x1(x2)}$	7 pF
x_2 to all other elements except x_1	$C_{x2(x1)}$	7 pF
y_1 to all other elements except y_2	$C_{y1(y2)}$	4 pF
y_2 to all other elements except y_1	$C_{y2(y1)}$	4 pF
x_1 to x_2	C_{x1x2}	2,2 pF
y_1 to y_2	C_{y1y2}	1,3 pF
Control grid to all other elements	C_{g1}	6 pF
Cathode to all other elements	C_k	4,5 pF

* The tube is provided with a rotation coil, concentrically wound around the tube neck, enabling the alignment of the x-trace with the mechanical x-axis of the screen. The coil has 1000 turns and a resistance of max. 350 Ω. Under typical operating conditions, max. 35 ampere-turns are required for the max. rotation of 5°. This means the required current is max. 35 mA at a required voltage of max. 12 V.

Notes to the drawings on opposite page.

1. The bulge at the frit seal may increase the indicated maximum dimensions by not more than 2 mm.
2. The coil is fixed to the envelope by means of adhesive tape.
3. The centre of the contact is situated within a square of 10 mm x 10 mm around the true geometrical position.
4. The length of the connecting leads of the rotation coil is min. 350 mm.

DIMENSIONS AND CONNECTIONS

For notes to the drawings see bottom of opposite page.

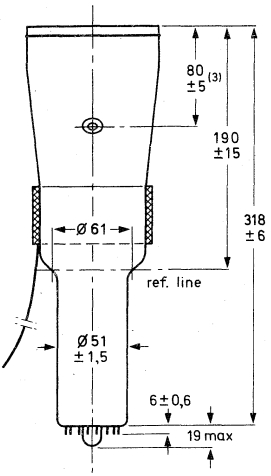

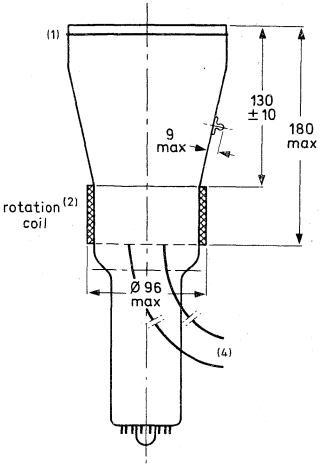

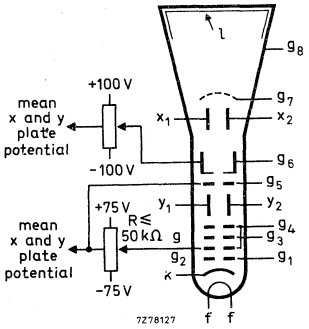

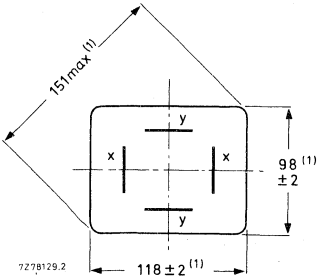

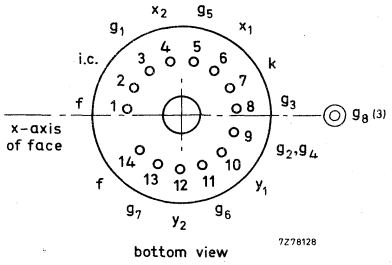

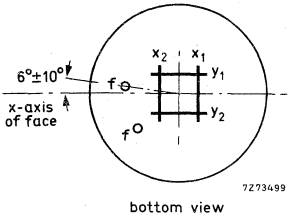

TYPICAL OPERATION

Conditions

Final accelerator voltage	$V_{g8(\ell)}$		10 kV	
Post deflection accelerator mesh electrode voltage	V_{g7}		2000 V	
Geometry control electrode voltage	V_{g6}		2000 ± 100 V	(note 1)
Interplate shield voltage	V_{g5}		2000 V	(note 2)
First accelerator voltage	$V_{g2,\ g4}$		2000 V	
Astigmatism control electrode voltage	$\Delta V_{g2,\ g4}$		± 75 V	(note 3)
Focusing electrode voltage	V_{g3}		400 to 560 V	
Control grid voltage for visual extinction of focused spot	V_{g1}		−25 to −70 V	

Performance

Useful scan				
horizontal		⩾	100 mm	(note 4)
vertical		⩾	80 mm	(note 4)
Deflection coefficient				
horizontal	M_x		12,8 V/cm	
		⩽	14 V/cm	
vertical	M_y		6,3 V/cm	
		⩽	7 V/cm	
Line width	l.w.	≈	0,38 mm	(note 5)
Deviation of linearity of deflection		⩽	2 %	(note 6)
Grid drive for 10 μA screen current		≈	20 V	
Geometry distortion	see note 7			

NOTES

1. The geometry control electrode voltage V_{g6} should be adjusted within the indicated range (values with respect to the mean x-plate potential).
2. The interplate shield voltage should be equal to the mean x-plate potential. The mean x-plate and y plate potentials should be equal for optimum spot quality.
3. The astigmatism control electrode voltage should be adjusted for optimum spot shape. For any necessary adjustment its potential will be within the stated range.
4. The tube is designed for optimum performance when operating at a ratio $V_{g8(\ell)}/V_{g2,\ g4} = 5$. If this ratio is smaller than 5, the useful scan may be smaller than 100 mm x 80 mm.
5. Measured with the shrinking raster method in the centre of the screen with corrections adjusted for optimum spot size, at a beam current of 10 μA.
6. The sensitivity at a deflection of less than 75% of the useful scan will not differ from the sensitivity at a deflection of 25% of the useful scan by more than the indicated value.
7. A graticule consisting of concentric rectangles of 95 mm x 75 mm and 93 mm x 73 mm is aligned with the electrical x-axis of the tube. With optimum corrections applied, the edges of a raster will fall between these rectangles.

LIMITING VALUES (Absolute maximum rating system)

Final accelerator voltage	$V_{g8(\ell)}$	max.	12 kV
		min.	9 kV
Post deflection accelerator mesh electrode voltage	V_{g7}	max.	2200 V
Geometry control electrode voltage	V_{g6}	max.	2200 V
Interplate shield voltage	V_{g5}	max.	2200 V
Accelerator voltage	$V_{g2, g4}$	max.	2200 V
		min.	1800 V
Focusing electrode voltage	V_{g3}	max.	2200 V
Control grid voltage	$-V_{g1}$	max.	200 V
		min.	0 V
Cathode to heater voltage			
positive	V_{kf}	max.	125 V
negative	$-V_{kf}$	max.	125 V
Grid drive, average		max.	20 V
Screen dissipation	W_ℓ	max.	8 mW/cm^2
Voltage between astigmatism control electrode and any deflection plate	$V_{g4/x}$	max.	500 V
	$V_{g4/y}$	max.	500 V

INSTRUMENT CATHODE-RAY TUBE

18 cm diagonal, rectangular flat faced oscilloscope tube with mesh and metal backed screen.

QUICK REFERENCE DATA			
Final accelerator voltage	$V_{g7(\ell)}$	10	kV
Display area		120 x 100	mm^2
Deflection factor, horizontal	M_x	15,5	V/cm
vertical	M_y	4,5	V/cm

SCREEN : Metal backed phosphor

	colour	persistence
D18-120GH	green	medium short

Useful screen area	min.	120 x 100	mm^2
Useful scan at $V_{g7(\ell)}/V_{g2,\,g4} = 5$			
horizontal	min.	120	mm
vertical	min.	100	mm
Spot eccentricity in horizontal direction		± 8	mm
in vertical direction		± 6	mm

HEATING : Indirect by a.c. or d.c.; parallel supply

Heater voltage	V_f	6,3	V
Heater current	I_f	300	mA

MECHANICAL DATA

Dimensions in mm

* The centre of the contact is located within a square of 10 mm x 10 mm around the true geometrical position.

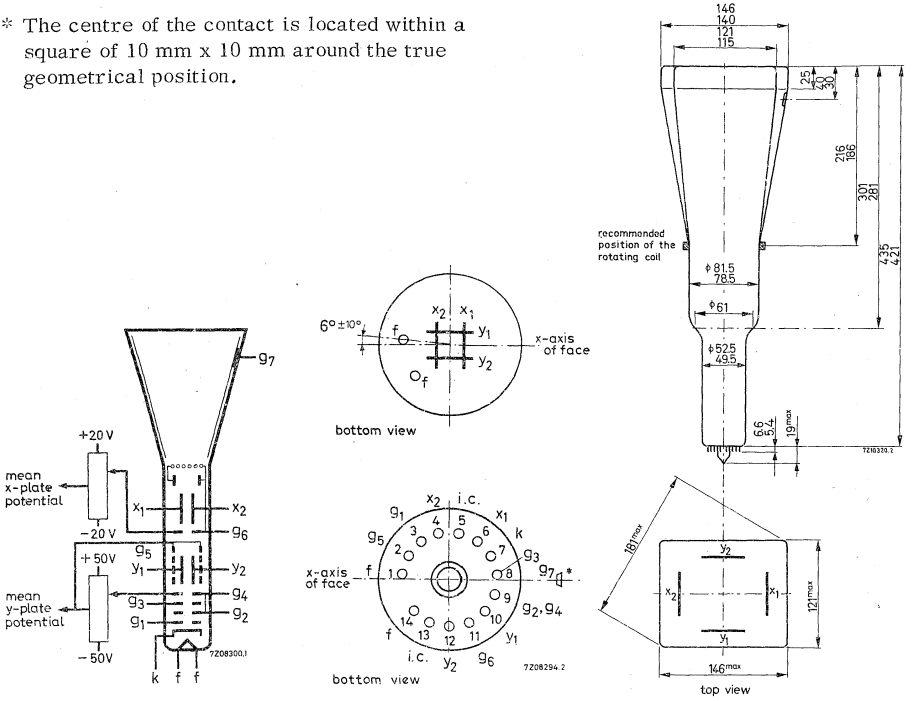

Mounting position: any

The tube should not be supported by the base alone and under no circumstances should the socket be allowed to support the tube.

Dimensions and connections

See also outline drawing

Overall length (socket included)	max.	454	mm
Face dimensions	max.	146 x 121	mm^2
Net weight	approx.	1300	g
Base		14 pin all glass	

Accessories

Socket (supplied with tube)	type 55566
Final accelerator contact connector	type 55563A
Mu-metal shield	type 55584

CAPACITANCES

x_1 to all other elements except x_2	$C_{x1(x_2)}$	6,5	pF
x_2 to all other elements except x_1	$C_{x2(x1)}$	6,5	pF
y_1 to all other elements except y_2	$C_{y_1(y_2)}$	5	pF
y_2 to all other elements except y_1	$C_{y2(y_1)}$	5	pF
x_1 to x_2	$C_{x_1x_2}$	2,2	pF
y_1 to y_2	$C_{y_1y_2}$	1,7	pF
Control grid to all other elements	C_{g_1}	5,5	pF
Cathode to all other elements	C_k	4,5	pF

FOCUSING electrostatic

DEFLECTION double electrostatic

x plates symmetrical

y plates symmetrical

If use is made of the full deflection capabilities of the tube the deflection plates will intercept part of the electron beam; hence a low impedance deflection plate drive is desirable.

Angle between x and y traces 90 ± 1°

Angle between x trace and the horizontal axis of the face max. 5° [1])

LINE WIDTH

Measured with the shrinking raster method in the centre of the screen under typical operating conditions, adjusted for optimum spot size at a beam current I_l = 10 μA.

Line width, at screw centre	l.w.		0,50	mm
in corner area	l.w.	approx.	0,60	mm

1) See page 5

TYPICAL OPERATING CONDITIONS

Final accelerator voltage	$V_{g7(\ell)}$		10000	V
Interplate shield voltage	V_{g6}		2000	V
Geometry control voltage	ΔV_{g6}		±20	V [2]
Deflection plate shield voltage	V_{g5}		2000	V [3]
Focusing electrode voltage	V_{g3}		350 to 500	V
First accelerator voltage	$V_{g2, g4}$		2000	V
Astigmatism control voltage	$\Delta V_{g2, g4}$		±50	V [4]
Control grid voltage for visual extinction of focused spot	V_{g1}		-25 to -80	V
Grid drive for 10 μA screen current		approx.	12	V
Deflection factor, horizontal	M_x	av.	15,5	V/cm
		max.	17	V/cm
vertical	M_y	av.	4,5	V/cm
		max.	5	V/cm
Deviation of linearity of deflection		max.	2	% [5]
Geometry distortion		See note 6		
Useful scan, horizontal		min.	120	mm
vertical		min.	100	mm

LIMITING VALUES (Absolute max. rating system)

Final accelerator voltage	$V_{g7(\ell)}$	max.	11000	V
		min.	9000	V
Interplate shield voltage and geometry control electrode voltage	V_{g6}	max.	2200	V
Deflection plate shield voltage	V_{g5}	max.	2200	V
Focusing electrode voltage	V_{g3}	max.	2200	V
First accelerator and astigmatism control electrode voltage	$V_{g2, g4}$	max.	2200	V
		min.	1350	V
Control grid voltage	$-V_{g1}$	max.	200	V
		min.	0	V
Cathode to heater voltage	V_{kf}	max.	125	V
	$-V_{kf}$	min.	125	V
Voltage between astigmatism control electrode and any deflection plate	$V_{g4/x}$	max.	500	V
	$V_{g4/y}$	max.	500	V
Grid drive, average		max.	20	V
Screen dissipation	W_ℓ	max.	8	mW/cm^2
Ratio $V_{g7(\ell)}/V_{g2, g4}$	$V_{g7(\ell)}/V_{g2, g4}$	max.	6,7	

Notes see page 5.

NOTES

1) In order to align the x-trace with the horizontal axis of the screen, the whole picture can be rotated by means of a rotation coil. This coil will have 50 amp. turns for the indicated max. rotation of 5° and should be positioned as indicated in the drawing.
2) This tube is designed for optimum performance when operating at a ratio $V_{g_7}/V_{g_2, g_4} = 5$.
   The geometry electrode voltage should be adjusted within the indicated range (values with respect to the mean x-plate potential).
   A negative control voltage will cause some pincushion distortion and less background light, a positive control voltage will give some barrel distortion and a slight increase of background light.
3) The deflection plate shield voltage should be equal to the mean y-plate potential. The mean x- and y-plate potentials should be equal for optimum spot quality.
4) The astigmatism control electrode voltage should be adjusted for optimum spot shape. For any necessary adjustment its potential will be within the stated range.
5) The sensitivity at a deflection of less than 75% of the useful scan will not differ from the sensitivity at a deflection of 25% of the useful scan by more than the indicated value.
6) A graticule, consisting of concentric rectangles of 115 mm x 95 mm and 112,2 mm x 93,0 mm is aligned with the electrical x-axis of the tube, with optimum correction potentials applied, a raster will fall between these rectangles.

INSTRUMENT CATHODE-RAY TUBE

Cathode-ray tube for monitoring purposes.

QUICK REFERENCE DATA			
Accelerator voltage	$V_{g3(\ell)}$	800	V
Display area	Both directions full scan		
Deflection coefficient, horizontal	M_x	62,5	V/cm
vertical	M_y	40	V/cm

SCREEN

	colour	persistence
DG7-5	yellowish green	medium short

Useful screen diameter > 65 mm

Useful scan

horizontal full scan

vertical full scan

HEATING

Indirect by a.c. or d.c.; parallel supply

Heater voltage	V_f	6,3	V
Heater current	I_f	300	mA

MECHANICAL DATA Dimensions in mm

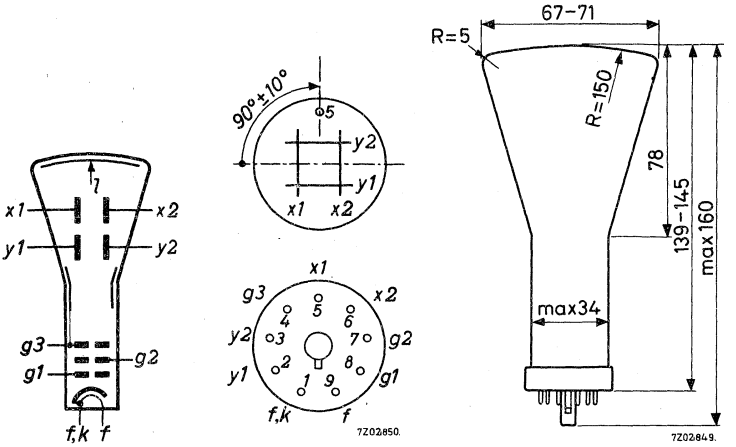

Mounting position:

The tube should not be supported by the base alone and under no circumstances should the socket be allowed to support the tube.

Base English Loctal 9-pin

Dimensions and connections

See also outline drawing

Overall length	<	160	mm
Face diameter	<	71	mm

Net mass: approx. 140 g

Accessories

Mu-metal shield type 55530

CAPACITANCES

x_1 to all other elements except x_2	$C_{x_1 (x_2)}$	2,8	pF
x_2 to all other elements except x_1	$C_{x_2 (x_1)}$	2,8	pF
y_1 to all other elements except y_2	$C_{y_1 (y_2)}$	3,0	pF
y_2 to all other elements except y_1	$C_{y_2 (y_1)}$	3,3	pF
x_1 to x_2	$C_{x_1 x_2}$	0,8	pF
y_1 to y_2	$C_{y_1 y_2}$	0,6	pF
Control grid to all other elements	C_{g_1}	7,0	pF
Cathode to all other elements	C_k	3,2	pF

FOCUSING electrostatic

DEFLECTION double electrostatic

x plates symmetrical

y plates symmetrical

Angle between x and y traces $90^o \pm 1,5^o$

LINE WIDTH

Measured on a circle of 50 mm diameter

Accelerator voltage	$V_{g_3 (\ell)}$	800	V
Beam current	$I_{(\ell)}$	0,5	μA
Line width	l.w.	0,4	mm

TYPICAL OPERATING CONDITIONS

Accelerator voltage	$V_{g_3 (\ell)}$	800	V
Focusing electrode voltage	V_{g_2}	200 to 300	V
Control grid voltage for visual extinction of focused spot	$-V_{g_1}$	max. 50	V
Deflection coefficient, horizontal	M_x	53 to 72	V/cm
vertical	M_y	33 to 45	V/cm
Geometry distortion		See note 1 page 4	
Useful scan, horizontal		full scan	
vertical		full scan	

LIMITING VALUES (Absolute max. rating system)

Accelerator voltage	$V_{g_{3\,(\ell)}}$	max.	1000	V
		min.	800	V
Focusing electrode voltage	V_{g_2}	max.	400	V
Control grid voltage				
negative	$-V_{g_1}$	max.	200	V
positive	V_{g_1}	max.	0	V
positive peak	$V_{g_{1p}}$	max.	2	V
Cathode to heater voltage				
cathode positive	V+k/f−	max.	200	V
cathode negative	V−k/f+	max.	125	V
Voltage between accelerator electrode and any deflection plate	$V_{g3/x}$	max.	500	V
	$V_{g3/y}$	max.	500	V
Screen dissipation	W_ℓ	max.	3	mW/cm^2

CIRCUIT DESIGN VALUES

Focusing voltage	V_{g_2}	250 to	375	V per kV of V_{g_3}
Control grid voltage for visual extinction of focused spot	$-V_{g_1}$	0 to	62,5	V per kV of V_{g_3}
Deflection coefficient				
horizontal	M_x	66 to	90	V/cm per kV of V_{g_3}
vertical	M_y	41 to	56	V/cm per kV of V_{g_3}
Control grid circuit resistance	R_{g_1}	max.	0,5	MΩ
Deflection plate circuit resistance	R_x, R_y	max.	5	MΩ

[1]) A graticule, consisting of concentric rectangles of 43.2 mm x 43.2 mm and 40 mm x 40 mm is aligned with the electrical x axis of the tube. The edges of a raster will fall between these rectangles with optimum correction potentials applied.

INSTRUMENT CATHODE-RAY TUBE

Cathode-ray tube for monitoring purposes.

QUICK REFERENCE DATA

Accelerator voltage	$V_{g3(\ell)}$	800	V
Display area	Both directions full scan		
Deflection coefficient			
horizontal	M_x	62,5	V/cm
vertical	M_y	40	V/cm

SCREEN

	Colour	Persistence
DG7-6	yellowish green	medium short

Useful screen diameter	>	65	mm
Useful scan			
horizontal	full scan		
vertical	full scan		

HEATING: Indirect by a.c. or d.c.; parallel supply

Heater voltage	V_f	6,3	V
Heater current	I_f	300	mA

MECHANICAL DATA

Dimensions and connections

See also outline drawing

Overall length	<	160	mm
Face diameter	<	71	mm

Net mass approx. 140 g

Accessories

Mu-metal shield type 55530

Dimensions in mm

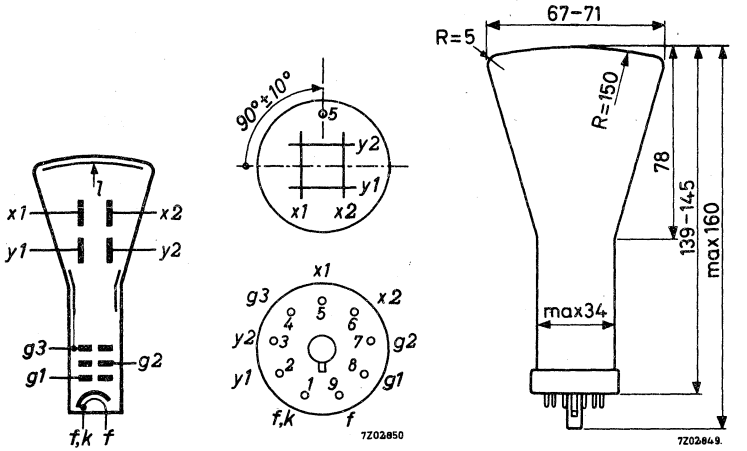

Mounting position: any

The tube should not be supported by the base alone and under no circumstances should the socket be allowed to support the tube.

Base English loctal 9-pin

CAPACITANCES

x_1 to all other elements except x_2	$C_{x1(x2)}$	2,8	pF
x_2 to all other elements except x_1	$C_{x2(x1)}$	2,8	pF
y_1 to all other elements except y_2	$C_{y1(y2)}$	3,0	pF
y_2 to all other elements except y_1	$C_{y2(y1)}$	3,3	pF
x_1 to x_2	C_{x1x2}	0,8	pF
y_1 to y_2	C_{y1y2}	0,6	pF
Control grid to all other elements	C_{g1}	7,0	pF
Cathode to all other elements	C_k	3,2	pF

FOCUSING electrostatic

DEFLECTION double electrostatic

x plates asymmetrical
x_1 has to be connected to the accelerator electrode.
Earthing of the accelerator electrode is recommended.

y plates symmetrical

Angle between x and y traces $90^o \pm 1,5^o$

LINE WIDTH

Measured on a circle of 50 mm diameter

Accelerator voltage	$V_{g3(\ell)}$	800	V
Beam current	I_ℓ	0,5	µA
Line width	l.w.	0,4	mm

TYPICAL OPERATING CONDITIONS

Accelerator voltage	$V_{g3(\ell)}$	800	V
Focusing electrode voltage	V_{g2}	200 to 300	V
Control grid voltage for visual extinction of focused spot	V_{g1}	< -50	V
Deflection coefficient, horizontal	M_x	53 to 72	V/cm
vertical	M_y	33 to 45	V/cm
Geometry distortion	see note 1		
Useful scan, horizontal	full scan		
vertical	full scan		

[1]) A graticule consisting of concentric rectangles of 43, 2 mm x 43, 2 mm and 40 mm x 40 mm is aligned with the electrical x axis of the tube. The edges of a raster will fall between these rectangles with optimum correction potentials applied.

LIMITING VALUES (Absolute max. rating system)

Accelerator voltage	$V_{g3(\ell)}$	max.	1000	V
		min.	800	V
Focusing electrode voltage	V_{g2}	max.	400	V
Control grid voltage, negative	$-V_{g1}$	max.	200	V
positive	V_{g1}	max.	0	V
positive peak	V_{g1_p}	max.	2	V
Cathode to heater voltage, positive	V_{kf}	max.	200	V
negative	$-V_{kf}$	max.	125	V
Voltage between accelerator electrode and any deflection plate	$V_{g3/x}$	max.	500	V
	$V_{g3/y}$	max.	500	V
Screen dissipation	W_ℓ	max.	3	mW/cm^2

CIRCUIT DESIGN VALUES

Focusing voltage	V_{g2}	250 to 375	V per kV of V_{g3}
Control grid voltage for visual extinction of focused spot	V_{g1}	0 to -62,5	V per kV of V_{g3}
Deflection coefficient, horizontal	M_x	66 to 90	V/cm per kV of V_{g3}
vertical	M_y	41 to 56	V/cm per kV of V_{g3}
Control grid circuit resistance	R_{g1}	max. 0,5	MΩ
Deflection plate circuit resistance	R_x, R_y	max. 5	MΩ

INSTRUMENT CATHODE-RAY TUBE

Low accelerator voltage cathode-ray tube with asymmetrical deflection, intended for monitoring purposes.

QUICK REFERENCE DATA			
Final accelerator voltage	$V_{g4g2(\ell)}$	500	V
Display area	Both directions full scan		
Deflection coefficient, horizontal	M_x	37	V/cm
vertical	M_y	21	V/cm

SCREEN

	Colour	Persistence
DG7-31	yellowish green	medium short

Useful diameter		> 65	mm
Useful scan, horizontal		full scan	
vertical		full scan	

HEATING

Indirect by a.c. or d.c.; parallel supply

Heater voltage	V_f	6,3	V
Heater current	I_f	300	mA

MECHANICAL DATA

Dimensions in mm

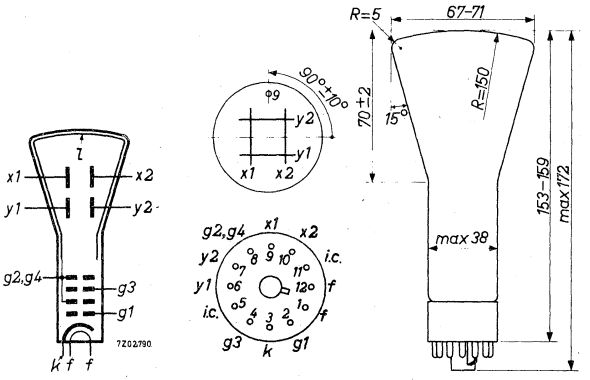

Mounting position: any

The tube should not be supported by the base alone and under no circumstances should the socket be allowed to support the tube.

Base Duodecal 12 pin

Dimensions and connections

See also outline drawing

Overall length	<	172	mm
Face diameter	<	71	mm

Net mass approx. 120 g

Accessories

Mu-metal shield	type	55530

CAPACITANCES

x_1 to all other elements except x_2	$C_{x1(x2)}$	3,7	pF
x2 to all other elements except x_1	$C_{x2(x1)}$	3,0	pF
y_1 to all other elements except y_2	$C_{y1(y2)}$	2,5	pF
y_2 to all other elements except y_1	$C_{y2(y1)}$	2,5	pF
x_1 to x_2	C_{x1x2}	1,7	pF
y_1 to y_2	C_{y1y2}	1,0	pF
Control grid to all other elements	C_{g1}	7,6	pF
Cathode to all other elements	C_k	3,2	pF

FOCUSING electrostatic

DEFLECTION double electrostatic

x plates asymmetrical

y plates symmetrical

Angle between x and y traces $90^o \pm 1,5^o$

LINE WIDTH

Measured on a circle of 50 mm diameter

Accelerator voltage	$V_{g4g2(\ell)}$	500	V
Beam current	I_ℓ	0,5	µA
Line width	l.w.	0,4	mm

TYPICAL OPERATING CONDITIONS

Accelerator voltage	$V_{g4g2(\ell)}$	500	V
Focusing electrode voltage	V_{g3}	0 to 120	V
Control grid voltage for visual extinction of focused spot	V_{g1}	-50 to -100	V
Deflection coefficient, horizontal	M_x	33,3 to 41,5	V/cm
vertical	M_y	18,8 to 23,2	V/cm
Geometry distortion		see note 1, page 4	
Useful scan, horizontal		full scan	
vertical		full scan	

LIMITING VALUES (Absolute max. rating system)

Accelerator voltage	$V_{g4g2(\ell)}$	max.	800	V
		min.	400	V
Focusing electrode voltage	V_{g3}	max.	200	V
Control grid voltage, negative	$-V_{g1}$	max.	200	V
positive	V_{g1}	max.	0	V
positive peak	V_{g1_p}	max.	2	V
Cathode to heater voltage, positive	V_{kf}	max.	200	V
negative	$-V_{kf}$	max.	125	V
Voltage between accelerator electrode and any deflection plate	$V_{g4/x}$	max.	500	V
	$V_{g4/y}$	max.	500	V
Screen dissipation	W_{ℓ}	max.	3	mW/cm^2

CIRCUIT DESIGN VALUES

Control grid circuit resistance	R_{g1}	max.	0,5	MΩ
Deflection plate circuit resistance	R_x, R_y	max.	5	MΩ
Focusing electrode current	I_{g3}	-15 to +10		μA [2]

[1] A graticule, consisting of concentric rectangles of 43,2 mm x 43,2 mm and 40 mm x 40 mm is aligned with the electrical x-axis of the tube. The edges of a raster will fall between these rectangles with optimum correction potentials applied.

[2] Values to be taken into account for the calculation of the focus potentiometer.

Remark: A contrast improving transparent conductive coating connected to $g_4g_2(\ell)$ is present between glass and fluorescent layer. This enables the application of a high potential to $g_4g_2(\ell)$ with respect to earth, without the risk of picture distortion by touching the face (electrostatic body-effect).

INSTRUMENT CATHODE-RAY TUBE

Low accelerator voltage cathode-ray tube with symmetrical deflection, intended for monitoring purposes.

QUICK REFERENCE DATA			
Final accelerator voltage	$V_{g4g2(\ell)}$	500	V
Display area	Both directions full scan		
Deflection coefficient, horizontal	M_x	37	V/cm
vertical	M_y	21	V/cm

SCREEN

	Colour	Persistence
DG7-32	yellowish green	medium short

Useful diameter	>	65	mm
Useful scan, horizontal	full scan		
vertical	full scan		

HEATING

Indirect by a.c. or d.c.: parallel supply

Heater voltage	V_f	6,3	V
Heater current	I_f	300	mA

MECHANICAL DATA

Dimensions in mm

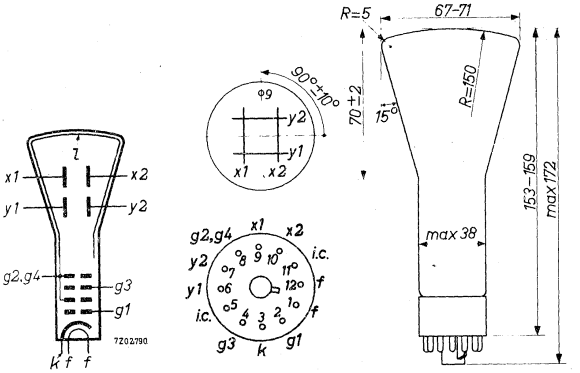

Mounting position: any

The tube should not be supported by the base alone and under no circumstances should the socket be allowed to support the tube.

Base Duodecal 12 pin

Dimensions and connections

See also outline drawing

Overall length	<	172	mm
Face diameter	<	71	mm

Net mass approx. 120 g

Accessories

Mu-metal shield	type	55530

CAPACITANCES

x_1 to all other elements except x_2	$C_{x1(x2)}$	3,7	pF
x_2 to all other elements except x_1	$C_{x2(x1)}$	3,0	pF
y_1 to all other elements except y_2	$C_{y1(y2)}$	2,5	pF
y_2 to all other elements except y_1	$C_{y2(y1)}$	2,5	pF
x_1 to x_2	C_{x1x2}	1,7	pF
y_1 to y_2	C_{y1y2}	1,0	pF
Control grid to all other elements	C_{g1}	7,6	pF
Cathode to all other elements	C_k	3,2	pF

FOCUSING electrostatic

DEFLECTION double electrostatic

x plates symmetrical

y plates symmetrical

Angle between x and y traces $90^o \pm 1,5^o$

LINE WIDTH

Measured on a circle of 50 mm diameter

Accelerator voltage	$V_{g4g2(\ell)}$	500	V
Beam current	I_ℓ	0,5	μA
Line width	l.w.	0,4	mm

TYPICAL OPERATING CONDITIONS

Accelerator voltage	$V_{g4g2(\ell)}$	500	V
Focusing electrode voltage	V_{g3}	0 to 120	V
Control grid voltage for visual extinction of focused spot	V_{g1}	-50 to -100	V
Deflection coefficient, horizontal	M_x	33,3 to 41,5	V/cm
vertical	M_y	18,8 to 23,2	V/cm
Geometry distortion		see note 1, page 4	
Useful scan, horizontal		full scan	
vertical		full scan	

LIMITING VALUES (Absolute max. rating system)

Accelerator voltage	$V_{g4g2(\ell)}$	max.	800	V
		min.	400	V
Focusing electrode voltage	V_{g3}	max.	200	V
Control grid voltage, negative	$-V_{g1}$	max.	200	V
positive	V_{g1}	max.	0	V
positive peak	V_{g1_p}	max.	2	V
Cathode to heater voltage, positive	V_{kf}	max.	200	V
negative	$-V_{kf}$	max.	125	V
Voltage between accelerator electrode and any deflection plate	$V_{g4/x}$	max.	500	V
	$V_{g4/y}$	max.	500	V
Screen dissipation	W_{ℓ}	max.	3	mW/cm^2

CIRCUIT DESIGN VALUES

Control grid circuit resistance	R_{g1}	max.	0,5	MΩ
Deflection plate circuit resistance	R_x, R_y	max.	5	MΩ
Focusing electrode current	I_{g3}	-15 to +10		μA [2]

[1] A graticule, consisting of concentric rectangles of 43, 2 mm x 43, 2 mm and 40 mm x 40 mm is aligned with the electrical x- axis of the tube. The edges of a raster will fall between these ractangles with optimum correction potentials applied.

[2] Values to be taken into account for the calculation of the focus potentiometer.

Remark: A contrast improving transparent conductive coating connected to $g_4g_2(\ell)$ is present between glass and fluorescent layer. This enables the application of a high potential to $g_4g_2(\ell)$ with respect to earth, without the risk of picture distortion by touching the face (electrostatic body-effect).

INSTRUMENT CATHODE-RAY TUBE

Low accelerator voltage cathode-ray tube for monitoring purpose

QUICK REFERENCE DATA			
Accelerator voltage	$V_{g4,\ g2,\ y2(\ell)}$	500	V
Display area	Both directions full scan		
Deflection coefficient, horizontal	M_x	56,5	V/cm
vertical	M_y	49	V/cm

SCREEN

	Colour	Persistence
DH3-91	green	medium short

Useful screen diameter min. 28 mm

Useful scan

horizontal full scan

vertical full scan

HEATING

Indirect by a.c. or d.c.; parallel supply

Heater voltage	V_f	6,3	V
Heater current	I_f	300	mA

MECHANICAL DATA

Dimensions in mm

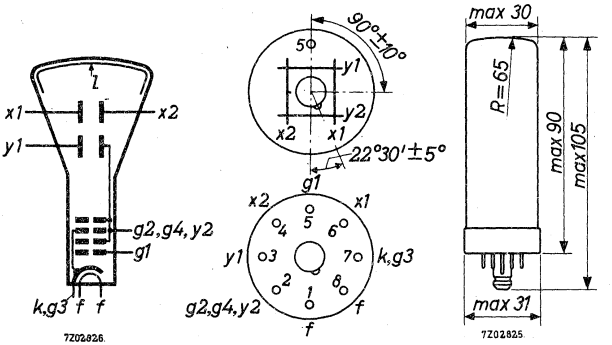

Mounting position: any

The tube should not be supported by the base alone and under no circumstances should the socket be allowed to support the tube.

Base:	English Loctal 8-pin	
Dimensions and connections		
See also outline drawing		
Overall length	<	105 mm
Face diameter	<	30 mm
Net mass:	approx.	39 g
Accessories		
Mu-metal shield	type	55525

CAPACITANCES

x_1 to all other elements except x_2	$C_{x_1(x_2)}$	4,5	pF
x_2 to all other elements except x_1	$C_{x_2(x_1)}$	4,5	pF
y_1 to all other elements except y_2	$C_{y_1(y_2)}$	3,5	pF
x_1 to x_2	$C_{x_1x_2}$	1,0	pF
Control grid to all other elements	C_{g_1}	5,6	pF

FOCUSING electrostatic self focusing

DEFLECTION double electrostatic

x plates symmetrical

y plates asymmetrical

LINE WIDTH

Measured on a circle of 25 mm diameter

Accelerator voltage	$V_{g_4, g_2, y_2(\ell)}$	500	V
Beam current	$I(\ell)$	0,5	μA
Line width	l.w.	0,6	mm

TYPICAL OPERATING CONDITIONS

Accelerator voltage	$V_{g_4, g_2, y_2(\ell)}$	500	V
Control grid voltage for visual extinction of focused spot	$-V_{g_1}$	8 to 27	V
Deflection coefficient			
horizontal	M_x	41 to 72	V/cm
vertical	M_y	35 to 63	V/cm
Useful scan			
horizontal		full scan	
vertical		full scan	

LIMITING VALUES (Absolute max. rating system)

Accelerator voltage	$V_{g_4, g_2, y_2(\ell)}$	max. 1000 min. 350	V V
Control grid voltage			
negative	$-V_{g_1}$	max. 200	V
positive	V_{g_1}	max. 0	V
positive peak	$V_{g_{1p}}$	max. 2	V
Cathode to heater voltage			
cathode positive	$V_{+k/f-}$	max. 200	V
cathode negative	$V_{-k/f+}$	max. 125	V
Screen dissipation	W_ℓ	max. 3	mW/cm^2

CIRCUIT DESIGN VALUES

Control grid voltage for visual extinction of focused spot	$-V_{g_1}$	16 to 54	V per kV of V_{g_4, g_2, y_2}
Deflection coefficient			
horizontal	M_x	90 to 120	V/cm per kV of V_{g_4, g_2, y_2}
vertical	M_y	38,5 to 52,5	V/cm per kV of V_{g_4, g_2, y_2}
Control grid circuit resistance	R_{g_1}	max. 1	MΩ
Deflection plate circuit resistance	R_x, R_y	max. 5	MΩ

REMARK

A contrast improving transparent conductive coating connected to the accelerator electrode is present between glass and fluorescent layer. This enables the application of a high potential with respect to earth to the accelerator electrode, without the risk of picture distortion by touching the face (electrostatic body-effect).

INSTRUMENT CATHODE-RAY TUBE

Oscilloscope tube with 7 cm diameter flat face and post deflection acceleration by means of a helical electrode. The low heater consumption together with the high sensitivity render this tube suitable for transistorized equipment.

QUICK REFERENCE DATA			
Final accelerator voltage	$V_{g6(\ell)}$	1200	V
Display area		4,5 x 6	cm^2
Deflection coefficient, horizontal	M_x	10,7	V/cm
vertical	M_y	3,65	V/cm

SCREEN

	Colour	Persistence
DI17-11	green	medium short
DN7-11	bluish green	medium short
DP7-11	yellowish green	long

Useful diameter	>	68	mm
Useful scan at $V_{g6(\ell)}/V_{g4} = 4$, horizontal	>	60	mm
vertical	>	45	mm

HEATING : Indirect by a.c. or d.c.; parallel supply

Heater voltage	V_f	6,3	V
Heater current	I_f	95	mA

MECHANICAL DATA

Dimensions and connections

See also outline drawing

Overall length	<	296	mm
Face diameter	<	77,8	mm
Net mass	approx.	370	g

Dimensions in mm

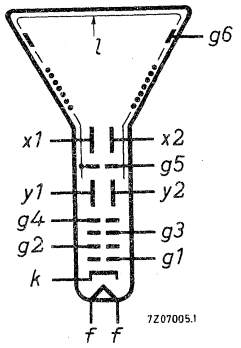

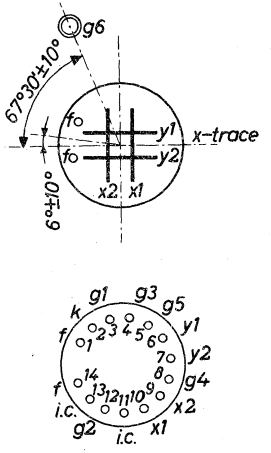

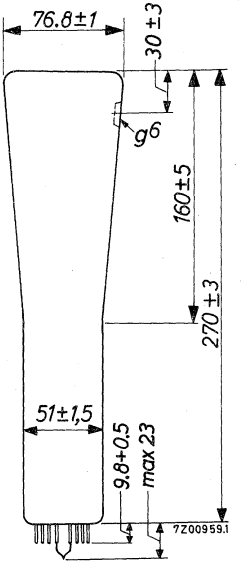

Mounting position: any

The tube should not be supported by the base alone and under no circumstances should the socket be allowed to support the tube.

Base 14 pin all glass

Accessories

Socket (supplied with tube)	type	40467
Final accelerator contact connector	type	55563A
Mu-metal shield	type	55532

CAPACITANCES

x_1 to all other elements except x_2	$C_{x1\,(x2)}$	4,0	pF
x_2 to all other elements except x_1	$C_{x2(x1)}$	4,0	pF
y_1 to all other elements except y_2	$C_{y1(y2)}$	3,5	pF
y_2 to all other elements except y_1	$C_{y2(y1)}$	3,5	pF
x_1 to x_2	C_{x1x2}	1,9	pF
y_1 to y_2	C_{y1y2}	1,7	pF
Control grid to all other elements	C_{g1}	5,7	pF
Cathode to all other elements	C_k	3,0	pF

FOCUSING	electrostatic
DEFLECTION	double electrostatic
x plates	symmetrical
y plates	symmetrical

If use is made of the full deflection capabilities of the tube the deflection plates will intercept part of the electron beam; hence a low impedance deflection plate drive is desirable.

Angle between x and y traces $90^{o} \pm 1^{o}$

LINE WIDTH

Measured with the shrinking raster method in the centre of the screen.

Final accelerator voltage	$V_{g6(\ell)}$	1200	V	
Astigmatism control electrode voltage	V_{g4}	300	V	2)
First accelerator voltage	V_{g2}	1200	V	
Beam current	I_{ℓ}	10	µA	
Line width	l.w.	0,65	mm	

HELIX

Post deflection accelerator helix resistance		> 40	MΩ	

TYPICAL OPERATING CONDITIONS

Final accelerator voltage	$V_{g6(\ell)}$	1200	V	
Geometry control electrode voltage	V_{g5}	300 ± 30	V	1)
Astigmatism control electrode voltage	V_{g4}	$300\ ^{+\ 40}_{-\ 15}$	V	2)
Focusing electrode voltage	V_{g3}	20 to 150	V	
First accelerator voltage	V_{g2}	1200	V	
Control grid voltage for visual extinction of focused spot	V_{g1}	-30 to -80	V	
Deflection coefficient, horizontal	M_x	9,4 to 12	V/cm	
vertical	M_y	3,2 to 4,1	V/cm	
Deviation of linearity of deflection		< 2	%	3)
Geometry distortion		see note 4		
Useful scan, horizontal		> 60	mm	
vertical		> 40	mm	

Notes see page 5.

CIRCUIT DESIGN VALUES

Focusing voltage	V_{g3}	35 to 165	V per kV of V_{g4}
Control grid voltage for visual extinction of focused spot	V_{g1}	-30 to -60	V per kV of V_{g2}
Deflection coefficient at $V_{g6(\ell)}/V_{g4} = 4$			
horizontal	M_x	31,3 to 40,0	V/cm per kV of V_{g4}
vertical	M_y	10,7 to 13,7	V/cm per kV of V_{g4}
Control grid circuit resistance	R_{g1}	max. 1,5	MΩ
Deflection plate circuit resistance	R_x, R_y	max. 50	kΩ
Focusing electrode current	I_{g3}	-15 to +10	μA [5]

LIMITING VALUES (Absolute max. rating system)

Final accelerator voltage	$V_{g6(\ell)}$	max.	5000	V
		min.	1200	V
Geometry control electrode voltage	V_{g5}	max.	2200	V
Astigmatism control electrode voltage	V_{g4}	max.	2100	V
		min.	300	V
Focusing electrode voltage	V_{g3}	max.	1000	V
First accelerator voltage	V_{g2}	max.	1600	V
		min.	800	V
Control grid voltage, negative	$-V_{g1}$	max.	200	V
positive	V_{g1}	max.	0	V
positive peak	V_{g1p}	max.	2	V
Cathode to heater voltage, positive	V_{kf}	max.	100	V
negative	$-V_{kf}$	max.	15	V
Voltage between astigmatism control electrode and any deflection plate	$V_{g4/x}$	max.	500	V
	$V_{g4/y}$	max.	500	V
Screen dissipation	W_ℓ	max.	3	W/cm^2
Ratio $V_{g6(\ell)}/V_{g4}$	$V_{g6(\ell)}/V_{g4}$	max.	4	

Notes see page 5

NOTES

1) This tube is designed for optimum performance when operating at the ratio $V_{g6(\ell)}/V_{g4} = 4$. Operation at other ratio may result in changes in deflection uniformity and geometry distortion. The geometry control electrode voltage should be adjusted for optimum performance. For any necessary adjustment its potential will be within the stated range.

2) The astigmatism control electrode voltage should be adjusted for optimum spot shape. For any necessary adjustment its potential will be within the stated range.

3) The sensitivity at a defelction of less than 75% of the useful scan will not differ from the sensitivity of 25% of the useful scan by more than the indicated value.

4) A graticule consisting of concentric rectangles of 40, 8 mm x 40, 8 mm and 39, 2 mm x 39, 2 mm is aligned with the electrical x axis of the tube. The edges of a raster will fall between these rectangles with optimum correction potentials applied.

5) Values to be taken into account for the calculation of the focus potentiometer.

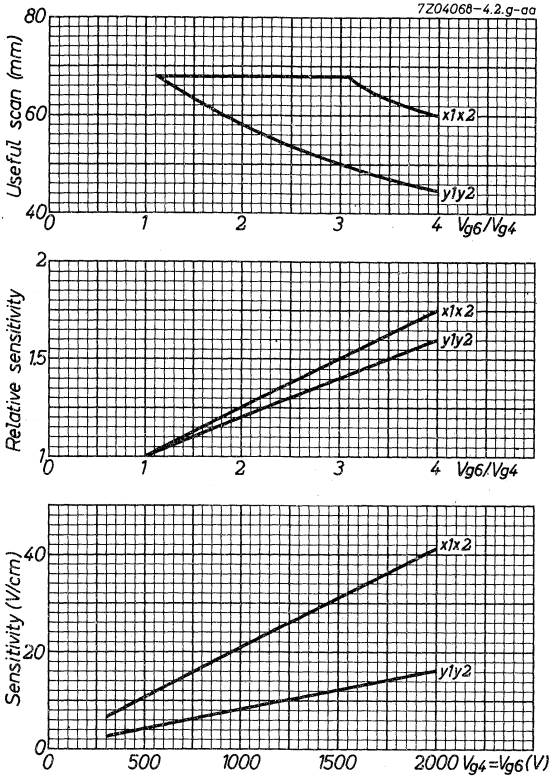
7Z04068-4.2.g-aa
Useful scan (mm)
80
60
40
0
1
2
3
4
Vg6/Vg4
x1x2
y1y2
Relative sensitivity
2
1.5
1
Sensitivity (V/cm)
40
20
0
500
1000
1500
2000
Vg4=Vg6(V)

INSTRUMENT CATHODE-RAY TUBE

10 cm diameter flat faced double gun oscilloscope tube, post-deflection acceleration by means of a helical electrode and low interaction between traces. The tube features beam-blanking.

QUICK REFERENCE DATA			
Final accelerator voltage	$V_{g_8(\ell)}$	3000	V
Display area	horizontal full scan vertical	7	cm
Deflection coefficient, horizontal	M_x	15	V/cm
vertical	M_y	7	V/cm

SCREEN

	colour	persistence
E10-12GH	green	medium short
E10-12GM	yellowish green	long
E10-12GP	bluish green	medium short

Useful screen diameter min. 85 mm

Useful scan (each gun) at $V_{g_8(\ell)}/V_{g_5} = 3$

horizontal full scan

vertical min. 70 mm

The useful scan may vertically be shifted to a max. of 5 mm with respect to the geometric centre of the face plate.

HEATING

Indirect by A.C. or D.C.; parallel supply

Heater voltage	each gun	V_f	6.3 V
Heater current	each gun	I_f	300 mA

MECHANICAL DATA

Dimensions in mm

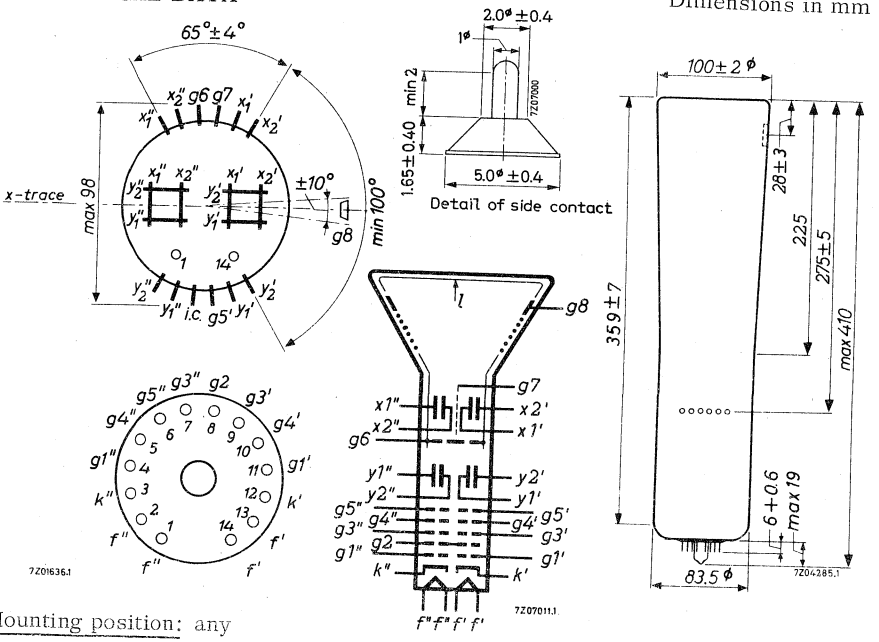

Mounting position: any

The tube should not be supported by the base alone and under no circumstances should the socket be allowed to support the tube.

Base		14 pin all glass	
Dimensions and connections			
Overall length	max.	410	mm
Face diameter	max.	102	mm
Net weight	approx.	800	g
Accessories			
Socket, supplied with tube	type	55566	
Final accelerator contact connector	type	55563A	
Side contact connector	type	55561	
Mu-metal shield	type	55545	

CAPACITANCES (each gun)

x_1' to all elements except x_2'	$C_{x_1'(x_2')}$	4.5	pF
x_2' to all elements except x_1'	$C_{x_2'(x_1')}$	3	pF
x_1'' to all other elements except x_2''	$C_{x_1''(x_2'')}$	3	pF
x_2'' to all other elements except x_1''	$C_{x_2''(x_1'')}$	4.5	pF
y_1 to all other elements except y_2	$C_{y_1(y_2)}$	2	pF
y_2 to all other elements except y_1	$C_{y_2(y_1)}$	2	pF
x_1 to x_2	$C_{x_1x_2}$	2	pF
y_1 to y_2	$C_{y_1y_2}$	1.5	pF
Grid No.1 to all other elements	C_{g_1}	5.2	pF
Cathode to all other elements	C_k	5	pF

FOCUSING electrostatic

DEFLECTION double electrostatic

x plates symmetrical

y plates symmetrical

Angle between x and y traces 90 ± 1°

Angle between x-traces $\pm 0.8^o$ max. in the centre of the screen.

Angle between y-traces $\pm 1^o$ max. in the centre of the screen.

If use is made of the full deflection capabilities of the tube the deflection plates will intercept part of the electron beam; hence a low impedance deflection plate drive is desirable.

LINE WIDTH

Measured with the shrinking raster method in the centre of the screen.

Final accelerator voltage	$V_{g_8(\ell)}$	3000	V
Astigmatism control electrode voltage	V_{g_5}	1000	V [3]
First accelerator voltage	V_{g_2}	1000	V
Beam current	$I_{g_8(\ell)}$	10	μA
Line width	l.w.	0.50	mm

HELIX

Post deflection accelerator helix resistance: min. 100 MΩ

[3]) See page 6.

TYPICAL OPERATING CONDITIONS(each gun)

Final accelerator voltage	$V_{g_8(\ell)}$	3000	V
Intergun shield voltage	V_{g_7}	1000±100	V [1]
Geometry control electrode voltage	V_{g_6}	1000±100	V [1] [2]
Astigmatism control electrode voltage	V_{g_5}	1000±100	V [3]
Focusing electrode voltage	V_{g_4}	180 to 380	V
Deflection blanking electrode voltage	V_{g_3}	1000	V
Deflection blanking control voltage for beam blanking of a current $I_{g_9(\ell)}$ = 10 μA	ΔV_{g_3}	max. 40	V
First accelerator voltage	V_{g_2}	1000	V
Control grid voltage for visual extinction of focused spot	V_{g_1}	-25 to -90	V
Deflection coefficient, horizontal	M_x	12 to 18	V/cm
vertical	M_y	6 to 8	V/cm
Deviation of linearity of deflection		max. 2.5	% [4]
Geometry distortion		See note 5	
Interaction factor		2.10^{-3}	mm/Vdc [6]
Tracking error		1.5	mm [7]

1) 2) 3) 4) 5) 6) 7) See page 6

LIMITING VALUES (each gun, if applicable) (Absolute max. rating system)

Final accelerator voltage	$V_{g_8(\ell)}$	max.	3300	V
		min.	2700	V
Intergun shield voltage	V_{g_7}	max.	1200	V
Geometry control electrode voltage	V_{g_6}	max.	1200	V
Astigmatism control electrode voltage	V_{g_5}	max.	1200	V
		min.	800	V
Focusing electrode voltage	V_{g_4}	max.	1200	V
Beam blanking electrode voltage	V_{g_3}	max.	1200	V
First accelerator voltage	V_{g_2}	max.	1200	V
		min.	200	V
Control grid voltage,				
negative	$-V_{g_1}$	max.	200	V
positive	V_{g_1}	max.	0	V
positive peak	$V_{g_{1p}}$	max.	2	V
Cathode to heater voltage,				
cathode positive	V_{kf}	max.	200	V
cathode negative	$-V_{kf}$	max.	125	V
Average cathode current	I_k	max.	300	μA
Screen dissipation	W_ℓ	max.	3	mW/cm^2
Ratio $V_{g_8(\ell)}/V_{g_5}$	$V_{g_8(\ell)}/V_{g_5}$	max.	3	

CIRCUIT DESIGN VALUES (each gun, if applicable)

Focusing voltage	V_{g_4}	180 to 380	V/kV of V_{g_2}
Control grid voltage for visual cut-off focused spot	V_{g_1}	25 to -90	V/kV of V_{g_2}
Deflection coefficient $V_{g_8(\ell)}/V_{g_5} = 3$			
horizontal	M_x	10 to 20	V/cm per kV of V_{g_5}
vertical	M_y	6 to 8	V/cm per kV of V_{g_5}
Focusing electrode current	I_{g_4}	-15 to +10	μA
Control grid circuit resistance	R_{g_1}	max. 1.5	MΩ

1) This tube is designed for optimum performance when operating at the ratio $V_{g_8(\ell)}/V_{g_5} = 3$. Operation at other ratio may result in changes in deflection uniformity and geometry distortion. The geometry control electrode voltage and the intergunshield voltage should be adjusted for optimum performance. For any necessary adjustment its potential will be within the stated range.

2) This voltage should be equal to the mean x- and y plates potential.

3) The astigmatism control electrode voltage should be adjusted for optimum spot shape. For any necessary adjustment its potential will be within the stated range.

4) The sensitivity at a deflection of less than 75% of the useful scan will not differ from the sensitivity at a deflection of 25% of the useful scan by more than the indicated value.

5) A graticule consisting of concentric rectangles of 60 mm x 60 mm and 57 mm x 57 mm is aligned with electrical x axis of the tube. The edges of a raster will fall between these rectangles with optimum potentials applied.

6) The deflection of one beam when balanced dc voltage are applied to the deflection plates of the other beam, will not be greater than the indicated value.

7) With 50 mm vertical traces superimposed at the tube face centre and deflected horizontally $\pm$ 4 cm by voltages proportional to the relative deflection factors, horizontal separation of the corresponding points of the traces shall not be greater than the indicated value.

INSTRUMENT CATHODE-RAY TUBE

10 cm diameter metal-backed flat-faced double gun oscilloscope tube with post-deflection acceleration by means of a helical electrode and low interaction between beams.

QUICK REFERENCE DATA			
Final accelerator voltage	$V_{g8(\ell)}$	4000	V
Display area	horizontal	full scan	
	vertical	7	cm
Deflection coefficient, horizontal	M_x	17	V/cm
vertical	M_y	7.4	V/cm

SCREEN

	Colour	Persistence
E10-130GH	green	medium short
E10-130GM	yellowish green	long
E10-130GP	bluish green	medium short

Useful screen diameter: min. 85 mm

Useful scan (each gun) at $V_{g8(\ell)}/V_{g5} = 4$: horizontal full scan; vertical min. 70 mm

The useful scan may be shifted vertically to a maximum of 5 mm with respect to the geometric centre of the face plate.

HEATING

Indirect by A.C. or D.C.; parallel supply

Heater voltage	V_f	6.3 V
Heater current	I_f	300 mA

MECHANICAL DATA

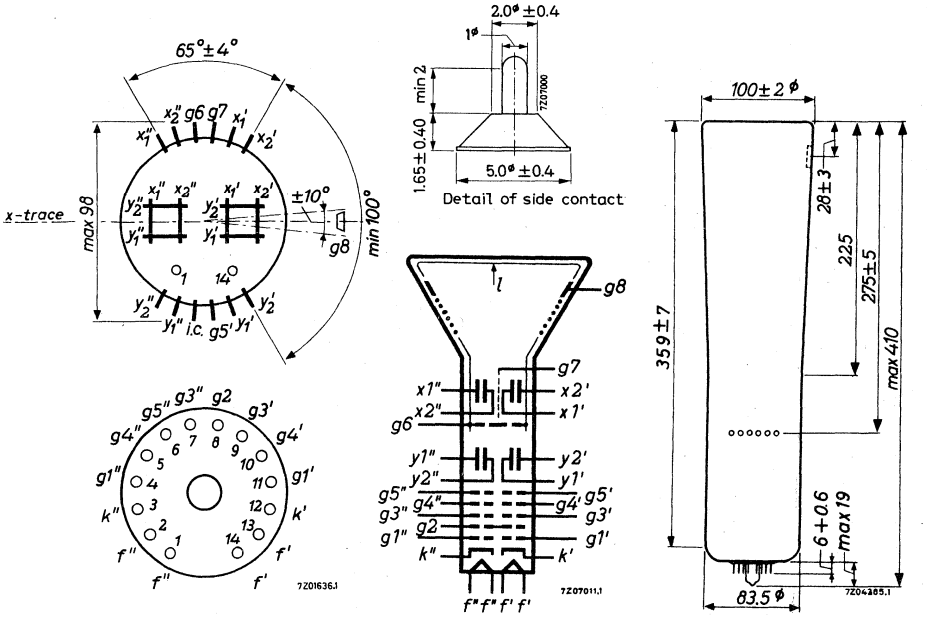

Mounting position: any

The tube should not be supported by the base alone and under no circumstances should the socket be allowed to support the tube.

Base	14 pin, all glass	
Dimensions and connections		
Overall length	max.	410 mm
Face diameter	max.	102 mm
Net weight	approx.	800 g
Accessories		
Socket, supplied with tube	type	55566
Final-accelerator contact connector	type	55563A
Side contact connector	type	55561
Mu-metal shield	type	55545

CAPACITANCES

x_1' to all other elements except x_2'	$C_{x_1'(x_2')}$	4.5	pF
x_2' to all other elements except x_1'	$C_{x_2'(x_1')}$	3	pF
x_1'' to all other elements except x_2''	$C_{x_1''(x_2'')}$	3	pF
x_2'' to all other elements except x_1''	$C_{x_2''(x_1'')}$	4.5	pF
y_1 to all other elements except y_2	$C_{y_1(y_2)}$	2	pF
y_2 to all other elements except y_1	$C_{y_2(y_1)}$	2	pF
x_1 to x_2	$C_{x_1x_2}$	2	pF
y_1 to y_2	$C_{y_1y_2}$	1.5	pF
Grid No.1 to all other elements	C_{g_1}	5.2	pF
Cathode to all other elements	C_k	5	pF

FOCUSING Electrostatic

DEFLECTION Double electrostatic

x plates symmetrical

y plates symmetrical

Angle between x and y traces (each gun)		90 ± 1	o
Angle between corresponding x traces at the centre of the screen	max.	0.6	o
Angle between corresponding y traces at the centre of the screen	max.	1	o

If use is made of the full deflection capabilities of the tube the deflection plates will intercept part of the electron beam; hence a low impedance deflection plate drive is desirable.

LINE WIDTH

Measured with the shrinking-raster method in the centre of the screen.

Final accelerator voltage	$V_{g_8(\ell)}$		4000	V
Astigmatism-control electrode voltage	V_{g_5}		1000	V 2)
First accelerator voltage	V_{g_2}		1000	V
Beam current	$I_{g_8(\ell)}$		10	μA
Line width	l.w.		0.4	mm
HELIX				
Post-deflection accelerator helix resistance		min.	100	MΩ

2) See page 5

TYPICAL OPERATING CONDITIONS (each gun, if applicable)

Final accelerator voltage	$V_{g_8(\ell)}$		4000	V	
Intergun shield voltage	V_{g_7}		1000±100	V	1)
Geometry-control electrode voltage	V_{g_6}		1000±100	V	1)
Astigmatism-control electrode voltage	V_{g_5}		1000±100	V	2)
Focusing electrode voltage	V_{g_4}		200 to 320	V	
Deflection-blanking electrode voltage	V_{g_3}		1000	V	
Deflection-blanking control voltage for blanking a beam current $I_{g_8(\ell)} = 10\ \mu A$	ΔV_{g_3}	max.	40	V	
First accelerator voltage	V_{g_2}		1000	V	
Control grid voltage for extinction of focused spot	V_{g_1}		-25 to -90	V	
Deflection coefficient, horizontal	M_x		14 to 20	V/cm	
vertical	M_y		6.4 to 8.4	V/cm	
Deviation of linearity of deflection		max.	2	%	3)
Geometry distortion			see note 4		
Interaction factor		max.	2.10^{-3}	mm/V_{DC}	5)
Tracking error			1.2	mm	6)

LIMITING VALUES (each gun, if applicable) (Absolute max. rating system)

Final accelerator voltage	$V_{g_8(\ell)}$	max.	5000	V
		min.	2700	V
Intergun shield voltage	V_{g_7}	max.	1200	V
Geometry control electrode voltage	V_{g_6}	max.	1200	V
Astigmatism control electrode voltage	V_{g_5}	max.	1200	V
		min.	800	V
Focusing electrode voltage	V_{g_4}	max.	1200	V
Beam blanking electrode voltage	V_{g_3}	max.	1200	V
First accelerator voltage	V_{g_2}	max.	1200	V
		min.	200	V
Control grid voltage, negative	$-V_{g_1}$	max.	200	V
positive	V_{g_1}	max.	0	V
Cathode to heater voltage,				
cathode positive	V_{kf}	max.	125	V
cathode negative	$-V_{kf}$	max.	125	V
Average cathode current	I_k	max.	300	μA
Screen dissipation	W_ℓ	max.	3	mW/cm^2
Ratio $V_{g_8(\ell)}/V_{g_5}$	$V_{g_8(\ell)}/V_{g_5}$	max.	4	

1) 2) 3) 4) 5) 6) See page 5

CIRCUIT DESIGN VALUES (each gun, if applicable)

Focusing voltage	V_{g_4}	200 to 320 V	per kV of V_{g_2}
Control grid voltage for extinction of focused spot	V_{g_1}	-25 to -90 V	per kV of V_{g_2}
Deflection coefficient at $V_{g_8(\ell)}/V_{g_5} = 4$			
horizontal	M_x	14 to 20 V/cm	per kV of V_{g_5}
vertical	M_y	6.4 to 8.4 V/cm	per kV of V_{g_5}
Focusing electrode current	I_{g_4}	-15 to +10 μA	
Control grid circuit resistance	R_{g_1}	max. 1.5 MΩ	

1) This tube is designed for optimum performance when operating at the ratio $V_{g_8(\ell)}/V_{g_5} = 4$. Operation at higher ratio may result in changes in deflection uniformity and geometry distortion. The geometry control electrode voltage and the intergun shield voltage should be adjusted for optimum performance. For any necessary adjustment its potential will be within the stated range.

2) The astigmatism control electrode voltage should be adjusted for optimum spot shape. For any necessary adjustment its potential will be within the stated range.

3) The sensitivity at a deflection of $\leq 75\%$ of the useful scan will not differ from the sensitivity at a deflection of 25% of the useful scan by more than the indicated value.

4) A graticule consisting of concentric rectangles of 60 mm x 60 mm and 57.5 mm x 57.5 mm is aligned with the electrical x axis of the tube. The edges of a raster will fall between these rectangles with optimum potentials applied.

5) The deflection of one beam when balanced DC voltages are applied to the deflection plates of the other beam, will not be greater than the indicated value.

6) With 50 mm vertical traces superimposed at the tube face centre and deflected horizontally ± 4 cm by voltages proportional to the relative deflection factors, horizontal separation of the corresponding points of the traces will not be greater than the indicated value.

INSTRUMENT CATHODE-RAY TUBE

14 cm diagonal, rectangular flat faced, split-beam oscilloscope tube with mesh and metal-backed screen.

QUICK REFERENCE DATA			
Final accelerator voltage	$V_{g7(\ell)}$	10	kV
Display area		100 x 80	mm^2
Deflection coefficient, horizontal	M_x	13,5	V/cm
vertical	M_y'	9	V/cm
	M_y''	9	V/cm
Overlap of the systems		100	%

SCREEN : Metal-backed phosphor

	Colour	Persistence
E14-100GH	green	medium short

Useful screen dimensions	min.	100 x 80	mm^2
Useful scan at $V_{g7(\ell)}/V_{g2,g4} = 6,7$			
horizontal	min.	100	mm
vertical (each system)	min.	80	mm
overlap		100	%
Spot eccentricity in horizontal direction	max.	7	mm
in vertical direction	max.	10	mm

HEATING : indirect by A.C. or D.C. ; parallel supply

Heater voltage	V_f	6,3	V
Heater current	I_f	300	mA

MECHANICAL DATA

Dimensions in mm

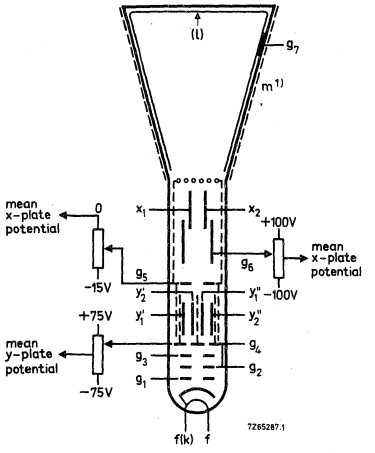

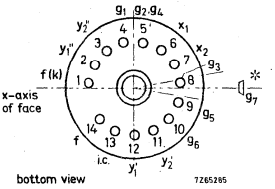

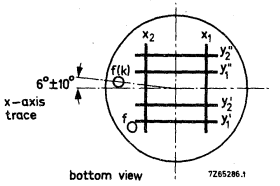

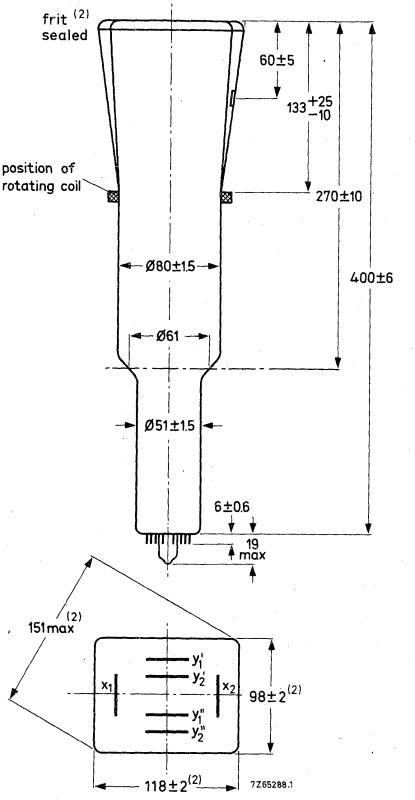

(1) The external conductive coating should be earthed.
(2) The bulge at the frit seal may increase the indicated maximum dimensions by not more than 2 mm.
* The centre of the contact is located within a square of 10 mm x 10 mm around the true geometrical position.

Mounting position: any

The tube should not be supported by the base alone and under no circumstances should the socket be allowed to support the tube.

MECHANICAL DATA (continued)

Dimensions and connections

See also outline drawing.

Overall length (socket included)	max.	425	mm
Face dimensions	max.	120 x 100	mm^2
Net weight	approx.	900	g
Base		14-pin all glass	

Accessories

Socket (supplied with tube)	type	55566
Final accelerator contact connector	type	55563A

FOCUSING Electrostatic

DEFLECTION Double electrostatic
x-plates symmetrical
y-plates symmetrical

If the full deflection capacity of the tube is used, part of the beam is intercepted by the deflection plates; hence a low-impedance deflection plate drive is desirable.

Angle between x and y traces (each beam)		90 ± 1	°
Angle between corresponding y traces at screen centre	max.	45	'
Angle between x trace and horizontal axis of the face	max.	0	°

See page 6

LINE WIDTH

Measured with the shrinking raster method under typical operating conditions, and adjusted for optimum spot size at a beam current of 5 μA per system.

Line width at screen centre	l.w	approx.	0,35	mm

CAPACITANCES

x_1 to all other elements except x_2	$C_{x_1(x_2)}$	8	pF
x_2 to all other elements except x_1	$C_{x_2(x_1)}$	8	pF
y_1' to all other elements except y_2'	$C_{y_1'(y_2')}$	4	pF
y_2' to all other elements except y_1'	$C_{y_2'(y_1')}$	5,5	pF
y_1'' to all other elements except y_2''	$C_{y_1''(y_2'')}$	5	pF
y_2'' to all other elements except y_1''	$C_{y_2''(y_1'')}$	4	pF
External conductive coating to all other elements	C_m	800	pF

CAPACITANCES (continued)

x_1 to x_2	$C_{x_1x_2}$	3 pF
y_1' to y_2'	$C_{y_1'y_2'}$	1 pF
y_1'' to y_2''	$C_{y_1''y_2''}$	1 pF
y_1' to y_1''	$C_{y_1'y_1''}$	0,005 pF
y_2' to y_2''	$C_{y_2'y_2''}$	0,005 pF
y_1' to y_2''	$C_{y_1'y_2''}$	0,001 pF
y_2' to y_1''	$C_{y_2'y_1''}$	0,015 pF
Control grid to all other elements	C_{g_1}	6 pF
Cathode and heater to all other elements	$C_{kf/R}$	3 pF

NOTES

1) This tube is designed for optimum performance when operating at a ratio $V_{g7(\ell)}/V_{g2,g4} = 6,7$.

The geometry control voltage V_{g6} should be adjusted within the indicated range (values with respect to the mean x-plate potential).

2) A negative control voltage on g_5 (with respect to the mean x-plate potential) will cause some pincushion distortion and less background light. By varying the two voltages V_{g5} and V_{g6} it is possible to find the best compromise between background light and raster distortion.

3) The astigmatism control electrode voltage should be adjusted for optimum spot shape. For any necessary adjustment its potential will be within the stated range.

4) The sensitivity at a deflection less than 75% of the useful scan will not differ from the sensitivity at a deflection of 25% of the useful scan by more than the indicated value.

5) A graticule, consisting of concentric rectangles of 100 mm x 80 mm and 96 mm x 77 mm is aligned with the electrical x-axis of the tube. With optimum correction potentials applied a raster of each system will fall between these rectangles.

TYPICAL OPERATING CONDITIONS

Final accelerator voltage	$V_{g7(\ell)}$	10	kV	
Geometry control electrode voltage	V_{g6}	1500 ± 100	V	1)
Interplate shield voltage	V_{g5}	1500	V	
Background illumination control voltage	ΔV_{g5}	0 to −15	V	2)
Focusing electrode voltage	V_{g3}	350 to 650	V	
First accelerator voltage	$V_{g2,\ g4}$	1500	V	
Astigmatism control voltage	$\Delta V_{g2,\ g4}$	±75	V	3)
Control grid voltage for extinction of focused spot	V_{g1}	−20 to −70	V	
Deflection coefficient, horizontal	M_x	12,5 < 14	V/cm V/cm	
vertical	M_y'	9 < 10	V/cm V/cm	
	M_y''	9 < 10	V/cm V/cm	
Deviation of deflection linearity		< 2	%	4)
Geometry distortion		see note 5)		
Useful scan, horizontal		> 100	mm	
vertical		> 80	mm	
Overlap of the two systems, horizontal		100	%	
vertical		100	%	

LIMITING VALUES (Absolute max. rating system)

Final accelerator voltage	$V_{g7(\ell)}$	max. 13 min. 9	kV kV	
Geometry control electrode voltage	V_{g6}	max. 2200	V	
Interplate shield voltage	V_{g5}	max. 2200	V	
Focusing electrode voltage	V_{g3}	max. 2200	V	
First accelerator and astigmatism control electrode voltage	$V_{g2,\ g4}$	max. 2200 min. 1350	V V	
Control grid voltage	$-V_{g1}$	max. 200 min. 0	V V	
Voltage between astigmatism control electrode and any deflection plate	V_{g4}/x V_{g4}/y	max. 500 max. 500	V V	
Grid drive average		max. 30	V	
Screen dissipation	W_ℓ	max. 8	mW/cm^2	
Ratio $V_{g7(\ell)}/V_{g2,\ g4}$	$V_{g7(\ell)}/V_{g2,\ g4}$	max. 6,7		

CORRECTION COILS

General

The E14-100GH is provided with a pair of coils L1 and L2 for image rotation which enable the alignment of the x-trace with the x-lines of the graticule.

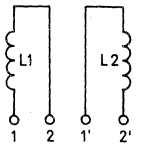

The image rotating coils are wound concentrically around the tube neck. Under typical operating conditions 50A turns are required for the maximum rotation of 5°. Both coils have 850 turns. This means that a current of max. 30 mA per coil is required which can be obtained by using a 24 V supply when the coils are connected in series, or a 12 V supply when they are in parallel.

Connecting the coils

The coils have been connected to the 4 solderingtags as follows:

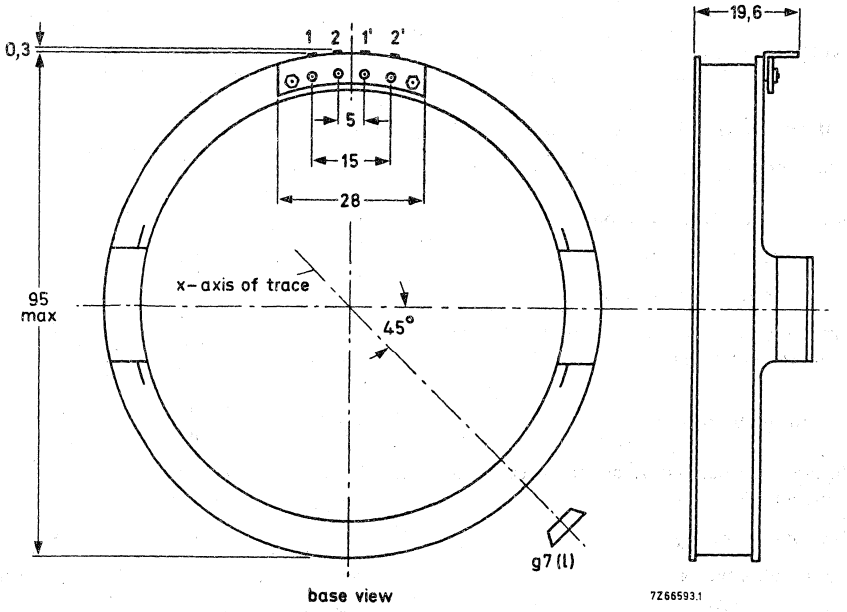

BEAM CENTRING MAGNET

Inherent to the split-beam system a slight difference between the two beam currents can occur after splitting, resulting in different intensities of the two traces. In order to equalize the beam currents, a beam centring magnet should be mounted near the base of the gun and adjusted for the required field direction and field strength.

INSTRUMENT CATHODE-RAY TUBE

The E14-101GH is equivalent to the E14-100GH but has no rotating coil.

INSTRUMENT CATHODE-RAY TUBE

Replacement type L14—111GH/55 with enhanced writing speed.

INSTRUMENT CATHODE-RAY TUBE

14 cm diagonal, rectangular flat-faced direct-view storage tube with variable persistence and internal graticule, intended for oscilloscope applications.

QUICK REFERENCE DATA

Final accelerator voltage	$V_{g10(\ell)}$	8,5	kV
Display area (10 x 8 divisions of 9 mm)		90 x 72	mm^2
Deflection coefficient			
horizontal	M_x	9,5	V/div
vertical	M_y	4,1	V/div
Writing speed		2,5	div/μs

OPTICAL DATA

Screen		metal backed phosphor	
type		GH, colour green	
persistence, non-store mode		medium-short	
persistence, store mode		variable	
Useful screen dimensions		min. 90 x 72	mm
Useful scan			
horizontal		min. 90	mm
vertical		min. 72	mm
Spot eccentricity in horizontal and vertical directions		max. 6	mm

The scanned raster can be shifted and aligned with the internal graticule by means of correction coils fitted around the tube by the manufacturer.

HEATING

Writing section

Indirect by a.c. or d.c.; parallel supply

Heater voltage	V_f	6,3	V
Heater current	I_f	300	mA

Viewing section

Indirect by d.c.; parallel supply

Heater voltage	$V_{f'}$	6,3	V
Heater current	$I_{f'}$	300	mA
Heater voltage	$V_{f''}$	6,3	V
Heater current	$I_{f''}$	300	mA

MECHANICAL DATA

Mounting position any

The tube should not be supported by the base alone and under no circumstances should the socket be allowed to support the tube. The tags near the screen should not be subjected to mechanical stress.

Net mass	approx.	1,1	kg
Base	14 pin, all glass		
Dimensions and connections			
See also outline drawing, pages 4 and 5			
Overall length (socket included)	max.	445	mm
Face dimensions	max.	100 x 120	mm
Accessories			
Socket (supplied with tube)	type	55566	
Side contact connector (14 required)	type	55561	

FOCUSING	electrostatic
DEFLECTION	double electrostatic
x-plates	symmetrical
y-plates	symmetrical
Angle between x and y-traces	90°
Angle between x-trace and x-axis of the internal graticule	0°
See also Correction coils	

CAPACITANCES

x_1 to all other elements except x_2	$C_{x1(x2)}$	6,5	pF
x_2 to all other elements except x_1	$C_{x2(x1)}$	6,5	pF
y_1 to all other elements except y_2	$C_{y1(y2)}$	3	pF
y_2 to all other elements except y_1	$C_{y2(y1)}$	3	pF
x_1 to x_2	C_{x1x2}	2,5	pF
y_1 to y_2	C_{y1y2}	2	pF
g_1 to all other elements	C_{g1}	5,5	pF
$g_{1'}$ to all other elements	$C_{g1'}$	5,5	pF
$g_{1''}$ to all other elements	$C_{g1''}$	5,5	pF
k to all other elements	C_k	4,5	pF
k' to all other elements	$C_{k'}$	5	pF
k'' to all other elements	$C_{k''}$	5	pF
g_7 to all other elements	C_{g7}	40	pF
g_9 to all other elements	C_{g9}	75	pF

DIMENSIONS AND CONNECTIONS

Dimensions in mm

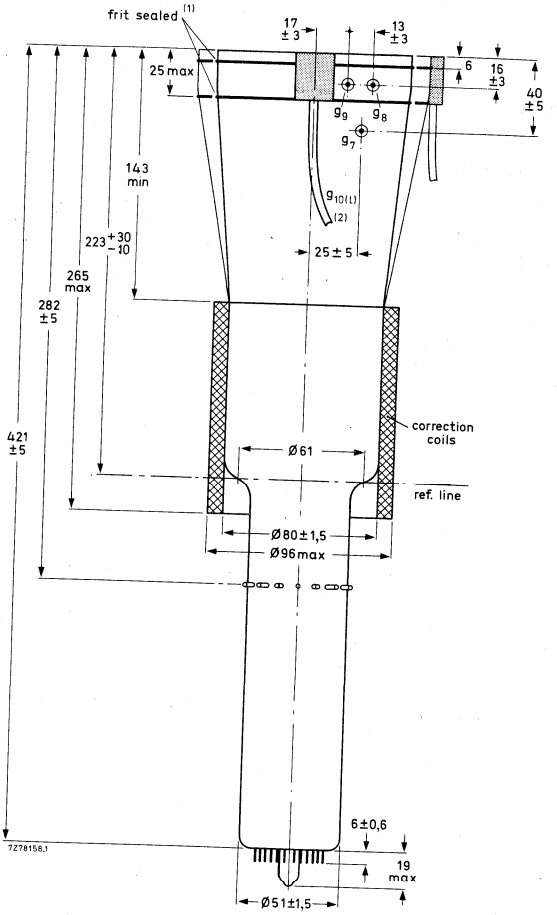

Fig. 1 Outlines.

(1) The bulge at the frit seal may increase the indicated maximum dimensions by not more than 3 mm.

(2) Minimum length of cable: 420 mm.

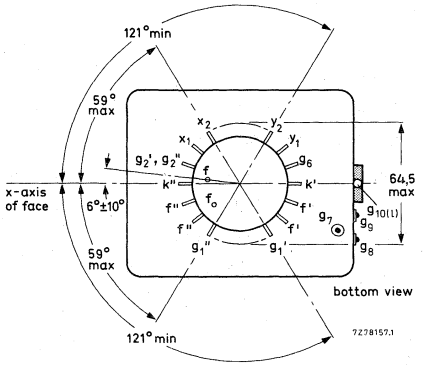

Fig. 2 Bottom view and side-contact arrangement.

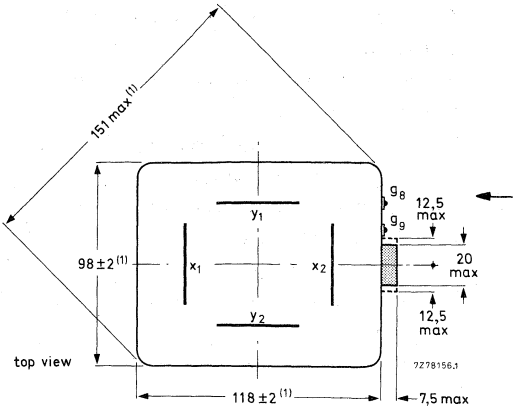

Fig. 3 Top view.

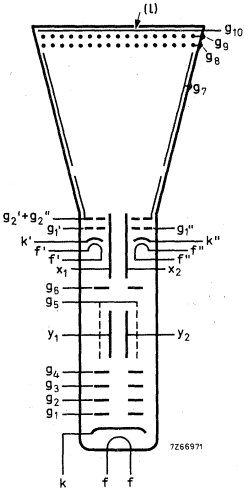

Fig. 4 Electrode configuration.

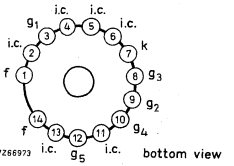

Fig. 5 Pin arrangement; bottom view.

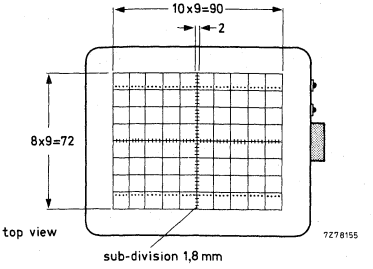

Fig. 7 Internal graticule
colour of graticule: brown-black;
line width : 0,15 mm;
dot diameter : 0,3 mm.

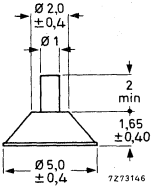

detail of side contact

Fig. 6 Detail of side contact

TYPICAL OPERATION (for notes see page 8)

Conditions

Writing section (voltages with respect to writing gun cathode k)

Final accelerator voltage	$V_{g10(\ell)}$	8500	V	note 1
Geometry control electrode voltage	V_{g6}	1500 ± 100	V	
Deflection plate shield voltage	V_{g5}	1500	V	note 2
Astigmatism control electrode voltage	V_{g4}	1500 ± 50	V	
Focusing electrode voltage	V_{g3}	400 to 600	V	
First accelerator voltage	V_{g2}	1500	V	
Control grid voltage for visual extinction of focused spot	V_{g1}	−40 to −80	V	

Viewing section (voltages with respect to viewing gun cathodes k′ and k″)

Final accelerator voltage	$V_{g10(\ell)}$	7050	V	note 1
Backing electrode voltage,				
storage operation	V_{g9}	0 to 5	V	
non-storage operation	V_{g9}	−35	V	
Collector voltage	V_{g8}	150	V	
Collimator voltage	V_{g7}	30 to 120	V	note 3
First accelerator voltage	$V_{g2'}$, $V_{g2''}$	50	V	note 4
Control grid voltage for cut-off	$V_{g1'}$, $V_{g1''}$	−30 to −70	V	
Cathode current (each viewing gun)	$I_{k'}$, $I_{k''}$	0,4	mA	

Performance

Useful scan				
horizontal		min. 90	mm	
vertical		min. 72	mm	
Deflection coefficient				
horizontal	M_x	9,5	V/div	
		max. 10,5	V/div	
vertical	M_y	4,1	V/div	
		max. 4,4	V/div	
Line width at the centre of the screen	l.w.	0,35	mm	note 5
Writing speed in store mode		greater than 250	div/ms	note 6
Storage time		greater than 1,5	min	note 7
Deviation of linearity of deflection		max. 2	%	note 8
Geometry distortion		see note 9		
Grid drive for 10 μA beam current		≈ 25	V	

LIMITING VALUES (Absolute maximum rating system)

Writing section (voltages with respect to writing gun cathode k)

Final accelerator voltage	$V_{g10(\ell)}$	max.	9500	V
		min.	7000	V
Geometry control electrode voltage	V_{g6}	max.	2100	V
Deflection plate shield voltage	V_{g5}	max.	2000	V
Astigmatism control electrode voltage	V_{g4}	max.	2100	V
		min.	1200	V
Focusing electrode voltage	V_{g3}	max.	1000	V
First accelerator voltage	V_{g2}	max.	2000	V
		min.	1250	V
Control grid voltage				
positive	V_{g1}	max.	0	V
negative	$-V_{g1}$	max.	200	V
Cathode to heater voltage				
positive	V_{kf}	max.	125	V
negative	$-V_{kf}$	max.	125	V
Voltage between astigmatism control electrode and any deflection plate	$V_{g4/x}$	max.	500	V
	$V_{g4/y}$	max.	500	V
Average grid drive		max.	30	V

Viewing section (voltages with respect to viewing gun cathodes k′ and k″ unless otherwise specified)

Final accelerator voltage	$V_{g10(\ell)}$	max.	8000	V
		min.	5500	V
Backing electrode voltage, storage operation	V_{g9}	max.	5	V
		min.	0	V
non-storage operation	$-V_{g9}$	max.	50	V
		min.	25	V
Collector voltage	V_{g8}	max.	180	V
		min.	120	V
Collimator voltage	V_{g7}	max.	200	V
		min.	0	V
First accelerator voltage	$V_{g2'}, V_{g2''}$	max.	60	V
		min.	40	V
Cathode to heater voltage				
positive	$V_{k'f'}, V_{k''f''}$	max.	125	V
negative	$-V_{k'f'}, -V_{k''f''}$	max.	125	V
Control grid voltage				
positive	$V_{g1'}, V_{g1''}$	max.	0	V
negative	$-V_{g1'}, -V_{g1''}$	max.	200	V

NOTES

1. These values are valid at cut-off of both flood guns and the writing gun. The H.T. unit must be capable of supplying 0,5 mA. To protect the tube against excessive surge current during erasure, an adequately dimensioned RC-network must be connected in series with the screen terminal lead (Fig. 8).

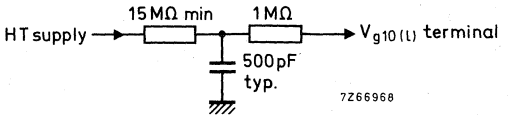

Fig. 8.

2. This voltage should be equal to the mean y-plate potential. The mean x and y-plate potentials should be equal for optimum spot quality.
3. The collimator electrode voltage should be adjusted for optimum uniformity of background illumination.
4. The voltage V_{g2}', V_{g2}'' should be equal to the mean x-plate potential.
5. Measured with the shrinking raster method in the centre of the screen under typical operating conditions, adjusted for optimum spot size at a beam current I_b = 10 μA (measured against x-plates).
6. The writing speed is defined as the maximum speed at which a written trace is just visible, starting from a background which is just black. The indicated value is guaranteed for the total graticule area, with the exception of maximum 5% in each corner. The writing speed can be increased to approx. 2,5 div/μs if some background is tolerated.
7. The storage time is defined as the time required for the brightness of the unwritten background to rise from just zero brightness (viewing-beam cut-off) to 10% of saturated brightness. At reduced intensity (by pulsing the flood beams) the storage time can be increased.
8. The sensitivity at a deflection less than 75% of the useful scan will not differ from the sensitivity at a deflection of 25% of the useful scan by more than the indicated value.
9. A graticule, consisting of concentric rectangles of 88 mm x 70 mm and 86 mm x 68,5 mm is aligned with the electrical x-axis of the tube. With optimum corrections applied, a raster will fall between these rectangles.

CORRECTION COILS

General

The L14-111GH/55 is provided with a coil unit (see Fig. 9) consisting of:

- a pair of coils L3 and L4 which enable the angle between the x and y-traces at the centre of the screen to the made exactly 90° (orthogonality correction);
- a pair of coils L1 and L2 for image rotation which enable the alignment of the x-trace with the x-lines of the graticule.

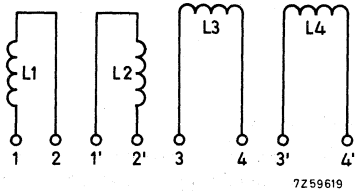

Fig. 9 Diagram of coil unit.

Orthogonality (coils L3 and L4)

The current required under typical operating conditions without a mu-metal shield being used is max. 20 mA for complete correction of orthogonality. It will be 30% to 50% lower with shield, depending on the shield diameter. The resistance of the coil is approx. 225 Ω.

Image rotation (coils L1 and L2)

The image rotation coils are wound concentrically around the tube neck. Under typical operating conditions 22 ampere-turns are required for maximum rotation of 5°. Both coils have 850 turns. This means that a current of max. 12,5 mA per coil is required which can be obtained by using a 12 V supply when the coils are connected in series or a 6 V supply when they are in parallel.

Connecting the coils

The coils have been connected to 8 solder tags according to Fig. 10.

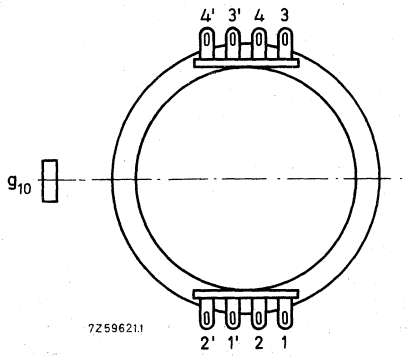

Fig. 10 Bottom view.

With L3 and L4 connected in series according to Fig. 11 a current in the direction indicated will produce a clockwise rotation of the vertical trace and an anti-clockwise rotation of the horizontal trace.

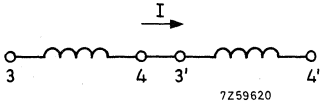

Fig. 11.

OPERATING NOTES

Modes of operation

Store mode

a. Dynamic erasure (variable persistence)

Dynamic erasure can be achieved by applying erasing pulses of positive polarity to the backing electrode. The pulse amplitude required is approximately 9V (< 15 V) and the persistence of a stored display can be controlled by varying the duty factor of these pulses.

b. Static erasure.

If no dynamic erasing pulses are applied, the storage time is limited by the potential shift of the storage layer due to landing of positive ions. In order to erase a stored display, the backing electrode should first be connected to the collector electrode voltage and then returned to its original potential for about 100 ms; after that, an erasing pulse of positive polarity and a duration of not less than 300 ms should be applied. For the adjustment of the amplitude of this pulse see Procedure of adjustment.

Non-store mode

For non-store operation, it is sufficient to make the backing electrode about 35 V negative with respect to the viewing gun cathodes. The viewing guns should not be switched off in this mode of operation since slight variations in raster geometry and deflection sensitivity might otherwise be caused. Care should be taken, especially when switching from store mode to non-store mode, that excessive writing beam current is avoided, as otherwise the storage layer may be damaged.

Procedure of adjustment

a. Adjust the cathode current of each viewing gun to 0,4 mA by means of its control grid voltage.

b. Adjustment of the erasing pulse amplitude (static erasure)

The pulse amplitude should be just sufficient to suppress any background illumination at the centre of the display area (this adjustment should be done under low ambient light conditions). Data on storage time and maximum writing speed are based on erasure to "just black". A larger pulse amplitude (erasure to "blacker than black") yields a longer storage time at the expense of maximum writing speed. On the other hand, writing speed can be increased if some background illumination is tolerated. To erase to "just black" the amplitude of this pulse is approximately 9 V.

c. Adjustment of the collimator voltage

With dynamic erasing pulses applied and a persistence control setting that yields a convenient background illumination intensity, the collimator voltage is adjusted for optimum background uniformity. This voltage will be approximately 80 V with respect to the viewing gun cathode potential. If this voltage is too high or too low, there is a decrease of intensity at the four corners or at the centres of the vertical edges of the display area respectively. For a good erasure of the display, the collimator voltage should be as low as possible.

INSTRUMENT CATHODE-RAY TUBE

Replacement type L14—131GH/55 with enhanced writing speed.

INSTRUMENT CATHODE-RAY TUBE

14 cm-diagonal rectangular flat-faced direct-view storage tube with split-beam writing gun, variable persistence and internal graticule, intended for oscilloscope applications.

QUICK REFERENCE DATA

Final accelerator voltage	$V_{g10\,(\ell)}$	8,5 kV
Useful scan (10 x 8 divisions of 9 mm)		90 x 72 mm
Deflection coefficient		
horizontal	M_x	9,5 V/div
vertical, system 1	M_y'	8,5 V/div
vertical, system 2	M_y''	8,5 V/div
Overlap of the systems		100 %
Writing speed		1,25 div/μs

OPTICAL DATA

Screen		metal-backed phosphor
type		GH, colour green
persistence, non-store mode		medium short
persistence, store mode		variable
Useful screen dimensions	min.	90 x 72 mm
Useful scan		
horizontal	min.	90 mm
vertical (each system)	min.	72 mm
overlap		100 %
Spot eccentricity		
in horizontal direction	max.	6 mm
in vertical direction	max.	9 mm

The scanned raster can be aligned with the internal graticule by means of correction coils fitted around the tube by the manufacturer.

HEATING

Writing section

Indirect by a.c. or d.c.; parallel supply

Heater voltage	V_f	6,3 V
Heater current	I_f	300 mA

Viewing section

Indirect by d.c.; parallel supply

Heater voltage	V_f'	6,3 V
Heater current	I_f'	300 mA
Heater voltage	V_f''	6,3 V
Heater current	I_f''	300 mA

MECHANICAL DATA

Mounting position any

The tube should not be supported by the base alone and under no circumstances should the socket be allowed to support the tube. The tags near the screen should not be subjected to mechanical stress.

Net mass	approx.	1,1 kg
Base	14 pin, all glass	
Dimensions and connections		
See also outline drawing, pages 4 and 5		
Overall length (socket included)	max.	445 mm
Face dimensions	max.	100 x 120 mm
Accessories		
Socket (supplied with tube)	type	55566
Side contact connector (16 required)	type	55561

FOCUSING	electrostatic
DEFLECTION	double electrostatic
x-plates	symmetrical
y-plates	symmetrical

If use is made of the full deflection capabilities of the tube, the deflection plates will block part of the electron beams, hence a low impedance deflection plate drive is desirable.

Angle between x and y traces, each beam		90°
Angle between x-trace and x-axis of the internal graticule		0°
Angle between corresponding y-traces at the centre of the screen	max.	45′

CAPACITANCES

Writing section

x_1 to all other elements except x_2	$C_{x1(x2)}$	6,5 pF
x_2 to all other elements except x_1	$C_{x2(x1)}$	6,5 pF
y_1' to all other elements except y_2'	$C_{y1'(y2')}$	5 pF
y_2' to all other elements except y_1''	$C_{y2'(y1')}$	6 pF
y_1'' to all other elements except y_2''	$C_{y1''(y2'')}$	6 pF
y_2'' to all other elements except y_1''	$C_{y2''(y1'')}$	5 pF
x_1 to x_2	$C_{x1\,x2}$	2,5 pF
y_1' to y_2'	$C_{y1'y2'}$	0,6 pF
y_1'' to y_2''	$C_{y1''y2''}$	0,6 pF
y_1' to y_1''	$C_{y1'y1''}$	4 fF
y_2' to y_2''	$C_{y2'y2''}$	5 fF
y_1' to y_2''	$C_{y1'y2''}$	0,3 fF
y_2' to y_1''	$C_{y2'y1''}$	8 fF
g_1 to all other elements	C_{g1}	5,5 pF
k to all other elements	C_k	4,5 pF

Viewing section

g_1' to all other elements	$C_{g1'}$	5,5 pF
g_1'' to all other elements	$C_{g1''}$	5,5 pF
k' to all other elements	$C_{k'}$	5 pF
k'' to all other elements	$C_{k''}$	5 pF
g_7 to all other elements	C_{g7}	45 pF
g_9 to all other elements	C_{g9}	75 pF

1 fF = 1 femto farad = 10^{-15} farad.

DIMENSIONS AND CONNECTIONS

Dimensions in mm

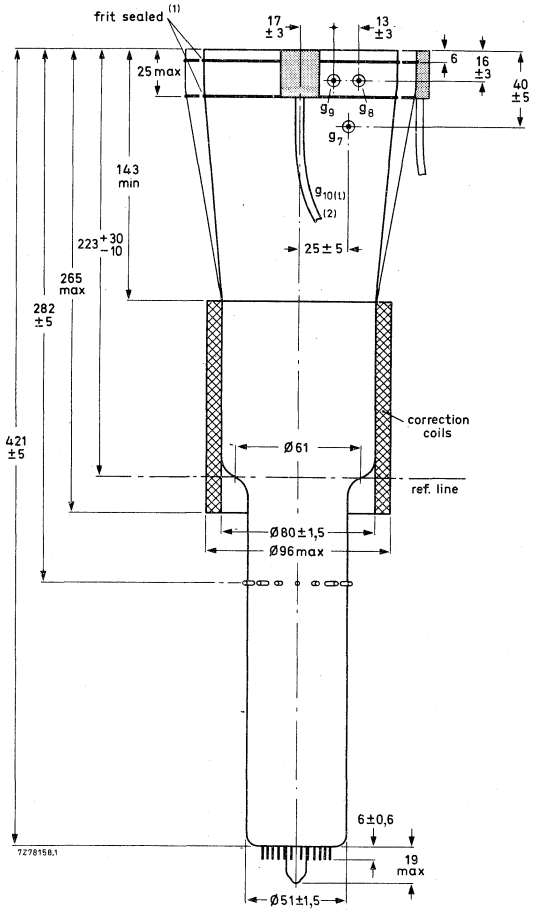

Fig. 1 Outlines.

(1) The bulge at the frit seal may increase the indicated maximum dimensions (Fig. 3) by not more than 3 mm.

(2) Minimum length of cable: 420 mm.

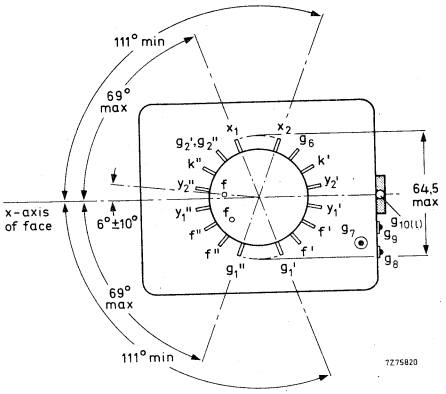

Fig. 2 Bottom view and side-contact arrangement.

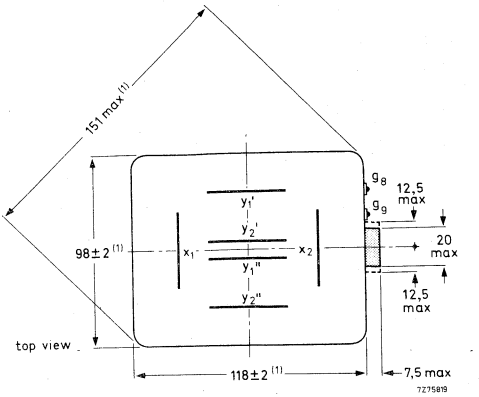

Fig. 3 Top view.

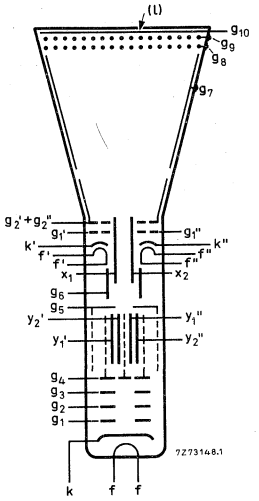

Fig. 4 Electrode configuration.

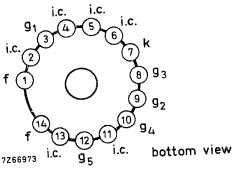

Fig. 5 Pin arrangement; bottom view.

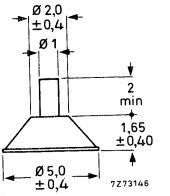

Fig. 6 Detail of side contact.

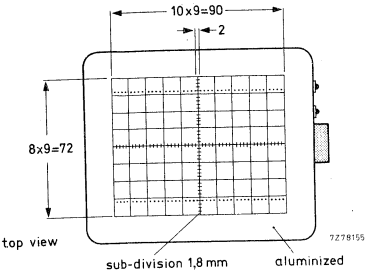

Fig. 7 Internal graticule.
Colour: brown-black;
line width: 0,15 mm;
dot diameter: 0,3 mm.

TYPICAL OPERATION (for notes see page 8)

Conditions

Writing section (voltages with respect to writing gun cathode k)

Final accelerator voltage	$V_{g10(\ell)}$	8500	V	note 1
Geometry control electrode voltage	V_{g6}	1500 ± 100	V	
Deflection plate shield voltage	V_{g5}	1500	V	note 2
Astignatism control electrode voltage	V_{g4}	1500 ± 75	V	
Focusing electrode voltage	V_{g3}	400 to 650	V	
First accelerator voltage	V_{g2}	1500	V	
Control grid voltage for visual extinction of focused spot	V_{g1}	−40 to −80	V	

Viewing section (voltages with respect to viewing gun cathode k' and k'')

Final accelerator voltage	$V_{g10(\ell)}$	7050	V	note 1
Backing electrode voltage,				
storage operation	V_{g9}	1	V	
non-storage operation	V_{g9}	−35	V	
Collector voltage	V_{g8}	150	V	
Collimator voltage	V_{g7}	30 to 120	V	note 3
First accelerator voltage	$V_{g2'}, V_{g2''}$	50	V	note 4
Control grid voltage for cut-off	$V_{g1'}, V_{g1''}$	−30 to −70	V	
Cathode current (each viewing gun)	$I_{k'}, I_{k''}$	0,4	mA	

Performance

Useful scan					
horizontal		min.	90	mm	
vertical		min.	72	mm	
Deflection coefficient					
horizontal	M_x		9,5	V/div	
		max.	10,5	V/div	
vertical, system 1	$M_{y'}$		8,5	V/div	
		max.	9,5	V/div	
vertical, system 2	$M_{y''}$		8,5	V/div	
		max.	9,5	V/div	
Line width at the centre of the screen	l.w.		0,40	mm	note 5
Writing speed in store mode		greater than	125	div/ms	note 6
Storage time		greater than	1,5	min	note 7
Deviation of linearity of deflection		max.	2	%	note 8
Geometry distortion		see note 9			
Grid drive for 5 μA beam current, per system		approx.	30	V	

LIMITING VALUES (Absolute maximum rating system)

Writing section (voltages with respect to writing gun cathode k)

Final accelerator voltage	$V_{g10(\ell)}$	max.	9500 V
		min.	7000 V
Geometry control electrode voltage	V_{g6}	max.	2100 V
Deflection plate shield voltage	V_{g5}	max.	2000 V
Astigmatism control electrode voltage	V_{g4}	max.	2100 V
		min.	1200 V
Focusing electrode voltage	V_{g3}	max.	1000 V
First accelerator voltage	V_{g2}	max.	2000 V
		min.	1250 V
Control grid voltage			
positive	V_{g1}	max.	0 V
negative	$-V_{g1}$	max.	200 V
Cathode to heater voltage			
positive	V_{kf}	max.	125 V
negative	$-V_{kf}$	max.	125 V
Voltage between astigmatism control electrode and any deflection plate	$V_{g4/x}$	max.	500 V
	$V_{g4/y}$	max.	500 V
Average grid drive		max.	30 V

Viewing section (voltages with respect to viewing gun cathodes k' and k'' unless otherwise specified)

Final accelerator voltage	$V_{g10(\ell)}$	max.	8000 V
		min.	5500 V
Backing electrode voltage, storage operation	V_{g9}	max.	5 V
		min.	0 V
non-storage operation	$-V_{g9}$	max.	50 V
		min.	25 V
Collector voltage	V_{g8}	max.	180 V
		min.	120 V
Collimator voltage	V_{g7}	max.	200 V
		min.	0 V
First accelerator voltage	$V_{g2'}$, $V_{g2''}$	max.	60 V
		min.	40 V
Cathode to heater voltage			
positive	$V_{k'f'}$, $V_{k''f''}$	max.	125 V
negative	$-V_{k'f'}$, $-V_{k''f''}$	max.	125 V
Control grid voltage			
positive	$V_{g1'}$, $V_{g1''}$	max.	0 V
negative	$-V_{g1'}$, $-V_{g1''}$	max.	200 V

NOTES

1. These values are valid at cut-off of both viewing (flood) guns and the writing gun. The H.T. unit must be capable of supplying 0,5 mA. To protect the tube against excessive surge current during erasure, an adequately dimensioned RC-network must be connected in series with the screen terminal lead (Fig. 8).

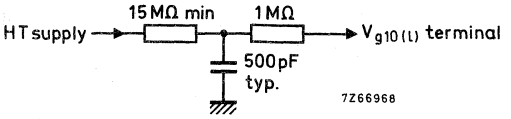

Fig. 8.

2. This voltage should be equal to the mean y-plate potential. The mean x and y-plate potentials should be equal for optimum spot quality.
3. The collimator electrode voltage should be adjusted for optimum uniformity of background illumination.
4. The voltage $V_{g2'}$, $V_{g2''}$ should be equal to the mean x-plate potential.
5. Measured with the shrinking raster method in the centre of the screen under typical operating conditions, adjusted for optimum spot size at a beam current I_b = 5 μA per system (measured against x-plates).
6. The writing speed is defined as the maximum speed at which a written trace is just visible, starting from a background which is just black. The indicated value is guaranteed for the total graticule area, with the exception of maximum 5% in each corner. The writing speed can be increased to approx. 1,25 div/μs if some background is tolerated.
7. The storage time is defined as the time required for the brightness of the unwritten background to rise from just zero brightness (viewing-beam cut-off) to 10% of saturated brightness. At reduced intensity (by pulsing the flood beams) the storage time can be increased.
8. The sensitivity at a deflection less than 75% of the useful scan will not differ from the sensitivity at a deflection of 25% of the useful scan by more than the indicated value.
9. A graticule, consisting of concentric rectangles of 88 mm x 70 mm and 84,8 mm x 67,6 mm is aligned with the electrical x-axis of the tube. With optimum corrections applied, a raster will fall between these rectangles.

CORRECTION COILS

General

The L14-131GH/55 is provided with a coil unit (see Fig. 9) consisting of:

1. A pair of coils L3 and L4 which enable the angle between the x and y-traces at the centre of the screen to be made exactly 90° (orthogonality correction).
2. A pair of coils L1 and L2 for image rotation which enable the alignment of the x-trace with the x-lines of the graticule.

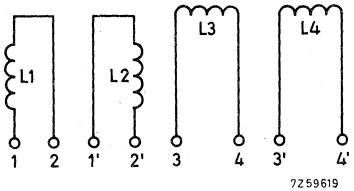

Fig. 9 Diagram of coil unit.

Orthogonality (coils L3 and L4)

The current required under typical operating conditions without a mu-metal shield being used is max. 20 mA for complete correction of orthogonality. It will be 30% to 50% lower with shield, depending on the shield diameter. The resistance of the coil is approx. 225 Ω.

Image rotation (coils L1 and L2)

The image rotation coils are wound concentrically around to the tube neck. Under typical operating conditions 22 ampere-turns are required for maximum rotation of 5°. Both coils have 850 turns. This means that a current of max. 12,5 mA per coil is required which can be obtained by using a 12 V supply when the coils are connected in series or a 6 V supply when they are in parallel.

Connecting the coils

The coils have been connected to 8 solder tags according to Fig. 10.

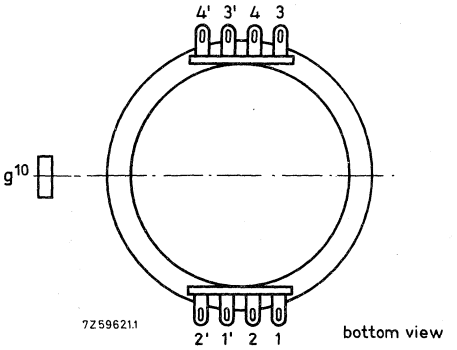

Fig. 10 Bottom view.

With L3 and L4 connected in series according to Fig. 11 a current in the direction indicated will produce a clockwise rotation of the vertical trace and an anti-clockwise rotation of the horizontal trace.

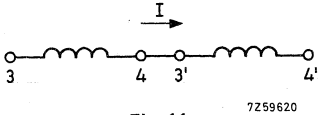

Fig. 11.

BEAM CENTRING MAGNET

Inherent to the split-beam system a slight difference between the two beam currents can occur after splitting, resulting in different intensities of the two traces. In order to equalize the beam currents, a beam centring magnet should be mounted near the base of the gun and adjusted for the required field direction and field strength.

OPERATING NOTES

Modes of operation

Store mode

a. Dynamic erasure (variable persistence).

Dynamic erasure can be achieved by applying erasing pulses of positive polarity to the backing electrode. The pulse amplitude required is approximately 9 V (< 15 V) and the persistence of a stored display can be controlled by varying the duty factor of these pulses.

b. Static erasure.

If no dynamic erasing pulses are applied, the storage time is limited by the potential shift of the storage layer due to landing of positive ions. In order to erase a stored display, the backing electrode should first be connected to the collector electrode voltage and then returned to its original potential for about 100 ms; after that, an erasing pulse of positive polarity and a duration of not less than 300 ms should be applied. For the adjustment of the amplitude of this pulse see Procedure of adjustment.

Non-store mode

For non-store operation, it is sufficient to make the backing electrode about 35 V negative with respect to the viewing gun cathodes. The viewing guns should not be switched off in this mode of operation since slight variations in raster geometry and deflection sensitivity might otherwise be caused. Care should be taken, especially when switching from store mode to non-store mode, that excessive writing beam current is avoided, as otherwise the storage layer may be damaged.

Procedure of adjustment

a. Adjust the cathode current of each viewing gun to 0,4 mA by means of its control grid voltage.

b. Adjustment of the erasing pulse amplitude (static erasure)

The pulse amplitude should be just sufficient to suppress any background illumination at the centre of the display area (this adjustment should be done under low ambient light conditions). Data on storage time and maximum writing speed are based on erasure to "just black". A larger pulse amplitude (erasure to "blacker than black") yields a longer storage time at the expense of maximum writing speed. On the other hand, writing speed can be increased if some background illumination is tolerated. To erase to "just black" the amplitude of this pulse is approximately 9 V.

c. Adjustment of the collimator voltage.

With dynamic erasing pulses applied and a persistence control setting that yields a convenient background illumination intensity, the collimator voltage is adjusted for optimum background uniformity. This voltage will be approximately 80 V with respect to the viewing gun cathode potential. If this voltage will be approximately 80 V with respect to the viewing gun cathode potential. If this voltage is too high or too low, there is a decrease of intensity at the four corners or at the centres of the vertical edges of the display area respectively.

MONITOR AND DISPLAY TUBES

MONITOR AND DISPLAY TUBES

PREFERRED TYPES

(Recommended types for new designs)

M17–140W
M17–141W
M24–100W
M24–101W
M31–130W
M31–131W
204M38W*

SCREENS

Although W is the standard screen, certain applications require screens of a different persistence and/or colour (e.g. GH, GR, GM). Tubes with such screens are supplied to special order.

BONDED FACE PLATES

Tubes with bonded face plates are supplied to special order.

* Data in preparation.

MONITOR TUBE

17 cm flat-faced rectangular picture tube primarily intended for use as a viewfinder in television cameras.

QUICK REFERENCE DATA			
Deflection angle, diagonal		70	°
Focusing		electrostatic	
Resolution	min.	650	lines
Overall length	max.	234	mm

SCREEN

Metal-backed phosphor

Luminescence	white
Useful rectangle	min. 124 x 93 mm^2

HEATING

Indirect by A.C. or D.C.; parallel supply

Heater voltage	V_f	6.3	V
Heater current	I_f	300	mA

MECHANICAL DATA

Mounting position: any

Base:	Neo Eightar (B8H)
Cavity contact	CT8
Accessories	
Final accelerator contact connector	55563A

MECHANICAL DATA

Dimensions in mm

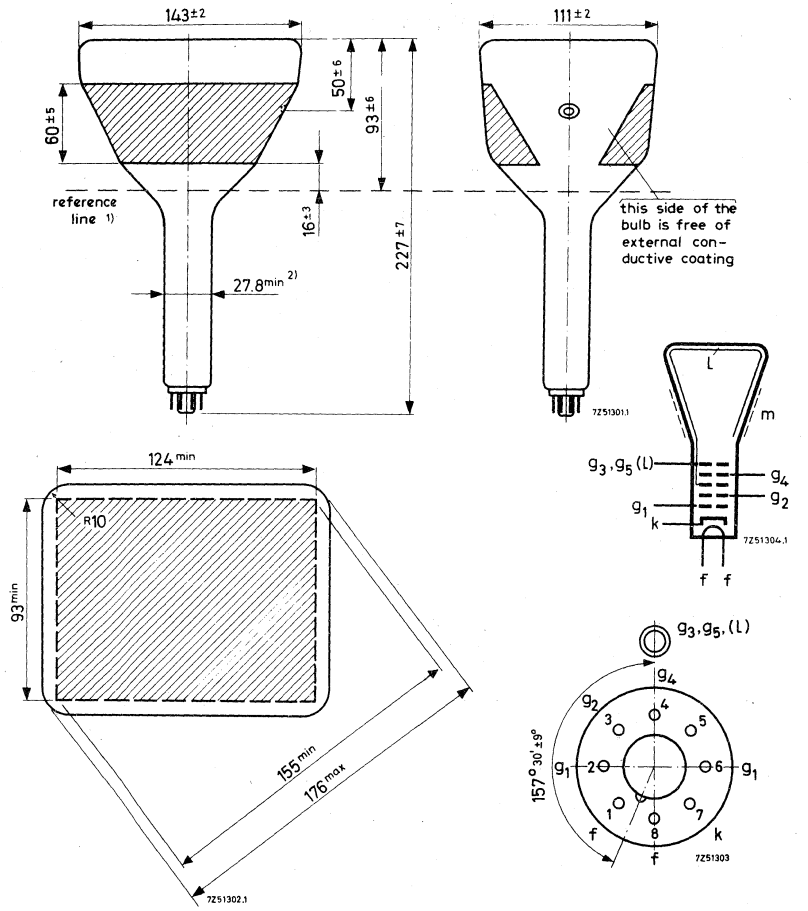

1) Reference line, determined by the plane of the upper edge of the flange of the reference line gauge when the gauge is resting on the cone.

2) The maximum dimension is determined by the reference line gauge.

FOCUSING Electrostatic

The range of focus voltage shown under "Typical operating conditions" results in optimum focus at a beam current of 50 μA.

DEFLECTION Magnetic [1])

Diagonal deflection angle 70°

REFERENCE LINE GAUGE Dimensions in mm

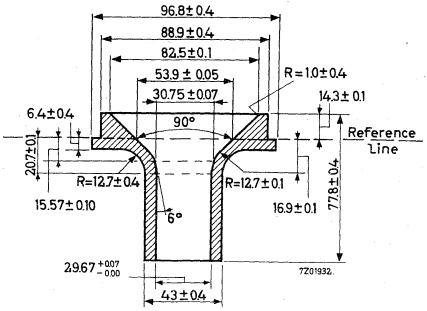

REMARK

With the high voltage used with this tube internal flash-overs may occur, which may destroy the cathode. Therefore it is necessary to provide protective circuits using sparkgaps. The sparkgaps must be connected as follows:

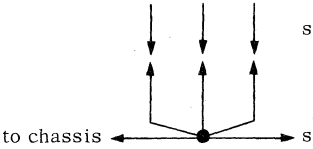

No other connections between outer conductive coating and chassis are permissible.

CAPACITANCES

Final accelerator to external conductive coating	$C_{g_3,g_5(\ell)}$/m	300 pF
Cathode to all other elements	C_k	5 pF
Grid No. 1 to all other elements	C_{g_1}	7 pF

[1]) Recommended deflection coil AT1071/07

TYPICAL OPERATING CONDITIONS

Final accelerator voltage	$V_{g_3, g_5(\ell)}$		14	kV
Focusing electrode voltage	V_{g_4}	0 to	400	V
First accelerator voltage	V_{g_2}		400	V
Grid no.1 voltage for extinction of focused raster	V_{g_1}	-30 to	-62	V

RESOLUTION

Resolution at screen centre measured with shrinking raster method (non-interlaced raster)

at $V_{g_3, g_5(\ell)}$ = 14 kV, V_{g_2} = 400 V, I_ℓ = 50 μA, B = 500 cd/m^2 (500 nit)		min.	650	lines [1]

LIMITING VALUES (Absolute max. rating system)

Final accelerator voltage	$V_{g_3, g_5(\ell)}$	max.	16	kV	
		min.	12	kV	
Focusing electrode voltage	V_{g_4}	max.	1	kV	
	$-V_{g_4}$	max.	0.5	kV	
First accelerator voltage	V_{g_2}	max.	800	V	
		min.	300	V	
Grid no.1 voltage, negative	$-V_{g_1}$	max.	150	V	
positive	V_{g_1}	max.	0	V	
positive peak	$V_{g_{1p}}$	max.	2	V	
Cathode to heater voltage, positive	V_{kf}	max.	250	V	
positive peak	V_{kf_p}	max.	300	V	[2]
negative	$-V_{kf}$	max.	135	V	
negative peak	$-V_{kf_p}$	max.	180	V	

WARNING

X-ray shielding of the cone is advisable to give protection against possible danger of personal injury arising from prolonged exposure at close range to this tube when operated above 14 kV.

---

[1] If necessary the resolution can be inproved by the use of a beam centring magnet. This magnet, type number 3322 142 11401, is supplied with each tube.

[2] During a warm-up period not exceeding 15 s the heater may be 410 V negative with respect to the cathode.

MONITOR TUBE

17 cm flat-faced rectangular picture tube primarily intended for use as a viewfinder in television cameras. The tube is provided with a bonded face plate and a metal mounting band.

QUICK REFERENCE DATA			
Deflection angle, diagonal		70	°
Focusing		electrostatic	
Resolution	min.	700	lines
Overall length	max.	240	mm

SCREEN

Metal-backed phosphor

Luminescence	white
Useful rectangle	min. 124 x 93 mm^2

HEATING

Indirect by A.C. or D.C.; parallel supply

Heater voltage	V_f	6.3	V
Heater current	I_f	300	mA

MECHANICAL DATA

Mounting position: any

Base:	Neo Eightar (B8H)
Cavity contact	CT8
Accessories	
Final-accelerator contact connector	55563A

MECHANICAL DATA

Dimensions in mm

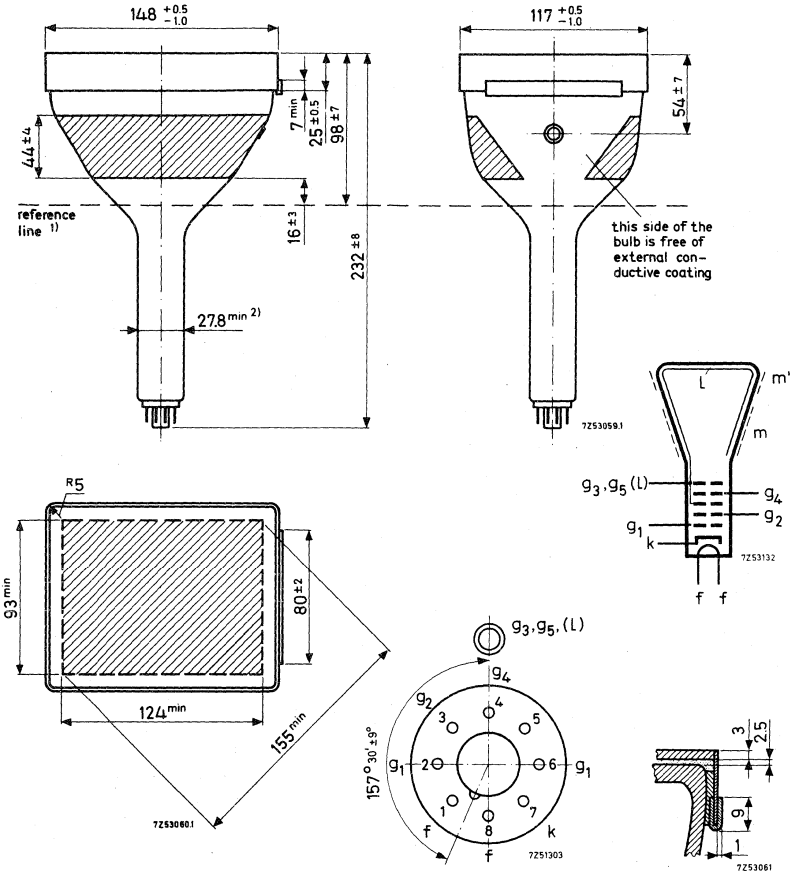

1) Reference line, determined by the plane of the upper edge of the flange of the reference line gauge when the gauge is resting on the cone.

2) The maximum dimension is determined by the reference line gauge.

FOCUSING Electrostatic

The range of focus voltage shown under "Typical operating conditions" results in optimum focus at a beam current of 50 μA.

DEFLECTION Magnetic [1]

Diagonal deflection angle 70°

REFERENCE LINE GAUGE Dimensions in mm

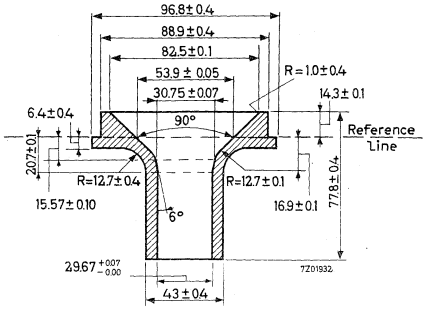

REMARK

With the high voltage used with this tube internal flash-overs may occur, which may destroy the cathode. Therefore it is necessary to provide protective circuits using sparkgaps. The sparkgaps must be connected as follows:

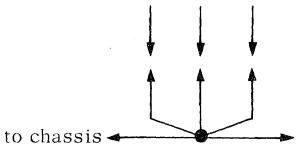

No other connections between outer conductive coating and chassis are permissible.

CAPACITANCES

Final accelerator to metal band	$C_{g_3, g_5(\ell)/m'}$	135 pF
Final accelerator to external conductive coating	$C_{g_3, g_5(\ell)/m}$	240 pF
Cathode to all other elements	C_k	5 pF
Grid No.1 to all other elements	C_{g_1}	7 pF

[1] Recommended deflection coil AT1071/07

TYPICAL OPERATING CONDITIONS

Final accelerator voltage	$V_{g_3, g_5(\ell)}$	14	16	kV
Focusing electrode voltage	V_{g_4}	0 to 400	0 to 400	V
First accelerator voltage	V_{g_2}	400	600	V
Grid no.1 voltage for extinction of focused raster	V_{g_1}	-30 to -62	-40 to -90	V

RESOLUTION

Resolution at screen centre measured with shrinking raster method (non-interlaced raster)

at $V_{g_3, g_5(\ell)}$ = 14 kV, V_{g_2} = 400 V, I_ℓ = 50 μA, B = 500 cd/m^2 (500 nit)	min.	650	lines	1)
at $V_{g_3, g_5(\ell)}$ = 16 kV, V_{g_2} = 600 V, I_ℓ = 50 μA, B = 600 cd/m^2 (600 nit)	min.	700	lines	1)

LIMITING VALUES (Absolute max. rating system)

Final accelerator voltage	$V_{g_3 g_5(\ell)}$	max.	18	kV	
		min.	12	kV	
Focusing electrode voltage	V_{g_4}	max.	1	kV	
	$-V_{g_4}$	max.	0.5	kV	
First accelerator voltage	V_{g_2}	max.	800	V	
		min.	300	V	
Grid no.1 voltage, negative	$-V_{g_1}$	max.	150	V	
positive	V_{g_1}	max.	0	V	
positive peak	V_{g1_p}	max.	2	V	
Cathode to heater voltage, positive	V_{kf}	max.	250	V	
positive peak	V_{kf_p}	max.	300	V	2)
negative	$-V_{kf}$	max.	135	V	
negative peak	$-V_{kf_p}$	max.	180	V	

WARNING

X-ray shielding of the cone is advisable to give protection against possible danger of personal injury arising from prolonged axposure at close range to this tube when operated above 14 kV.

---

1) If necessary the resolution can be improved by the use of a beam centring magnet. This magnet, type number 3322 142 11401, is supplied with each tube.

2) During a warm-up period not exceeding 15 s the heater may be 410 V negative with respect to cathode.

MONITOR TUBE

The M24-100W is a 24 cm-diagonal rectangular television tube with metal-backed screen primarily intended for use as a monitor or display tube.

QUICK REFERENCE DATA		
Deflection angle		90 °
Focusing		electrostatic
Resolution		900 lines
Overall length	max.	260 mm

SCREEN

Metal-backed phosphor			
Luminescence		white	
Light transmission of face glass		52	%
Useful diagonal	min.	225	mm
Useful width	min.	190	mm
Useful height	min.	140	mm

HEATING

Indirect by a.c. or d.c.; parallel supply

Heater voltage	V_f	6,3	V
Heater current	I_f	300	mA

CAPACITANCES

Final accelerator to external conductive coating	$C_{g_3, g_5(\ell)/m}$	420	pF
Cathode to all other elements	C_k	5	pF
Control grid to all other elements	C_{g_1}	7	pF

FOCUSING

electrostatic

For focusing voltage providing optimum focus at a beam current of 100 μA see under "Typical operating conditions".

DEFLECTION [3]

magnetic

Diagonal deflection angle

90°

MECHANICAL DATA

Dimensions in mm

[4]

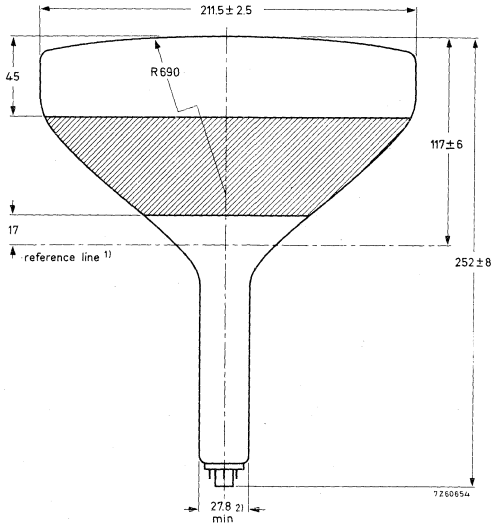

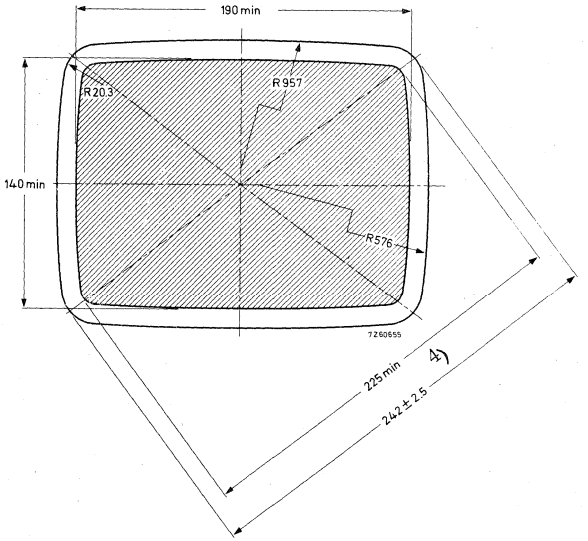

Notes see page 3

MECHANICAL DATA (continued)

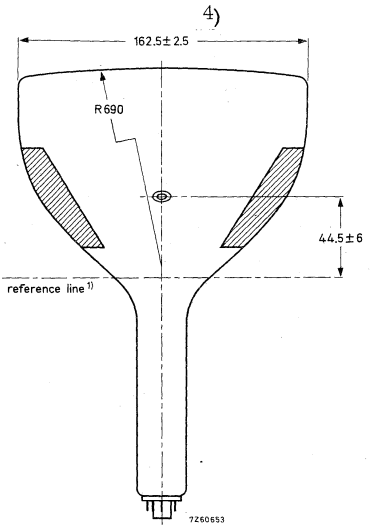

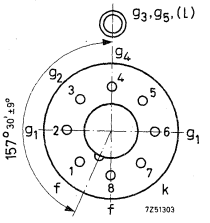

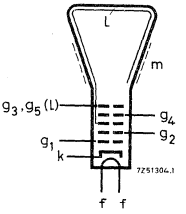

Mounting position : any, except vertical with the screen downward and the axis of the tube making an angle of less than 20° with the vertical.

Base	Neo eightar (B8H)
Cavity contact	CT8
Accessories	
Socket	2422 501 06001
Final accelerator contact connector	type 55563A

PICTURE CENTRING MAGNET

Field intensity perpendicular to the tube axis adjustable from 0 to 800 A/m (0 to 10 Oe). Adjustment of the centring magnet should not be such that a general reduction in brightness or shading of the raster occurs.

NOTES

1) The reference line is determined by the plane of the upper edge of the of the flange of reference line gauge when the gauge is resting on the cone.

2) The maximum dimension is determined by the reference line gauge.

3) Deflection coil AT1071/03 is recommended. If another coil is considered, it is advisable to contact the local tube supplier.

4) The bulge at the spliceline seal may increase the indicated maximum values for envelope width, diagonal and height by not more than 6,4 mm, but at any point around the seal the bulge will not protrude more than 3,2 mm beyond the envelope surface.

TYPICAL OPERATING CONDITIONS

Final accelerator voltage	$V_{g_3,g_5(\ell)}$			16	kV
Focusing electrode voltage	V_{g_4}	0	to	400	V
First accelerator voltage	V_{g_2}			600	V
Grid no.1 voltage for extinction of focused raster	V_{g_1}	-32	to	-85	V

RESOLUTION

Resolution at screen centre measured with the shrinking raster method (non-interlaced raster), under typical operating conditions, at a beam current of 50 μA (200cd/m^2 = 200 nit)
The resolution can be improved by the use of beam centring magnet catalogue number 3322 142 11401, supplied on request.

900 lines

LIMITING VALUES (Absolute max. rating system)

Final accelerator voltage	$V_{g_3,g_5(\ell)}$	max.	18	kV
		min.	10	kV
Focusing electrode voltage	V_{g_4}	max.	1	kV
	$-V_{g_4}$	max.	0,5	kV
First accelerator voltage	V_{g_2}	max.	800	V
		min.	300	V
Grid no.1 voltage, negative	$-V_{g_1}$	max.	150	V
positive	V_{g_1}	max.	0	V
positive peak	$V_{g_{1p}}$	max.	2	V
Cathode to heater voltage, positive	V_{kf}	max.	250	V
positive peak	V_{kf_p}	max.	300	V [1]
negative	$-V_{kf}$	max.	135	V
negative peak	$-V_{kf_p}$	max.	180	V

REFERENCE LINE GAUGE

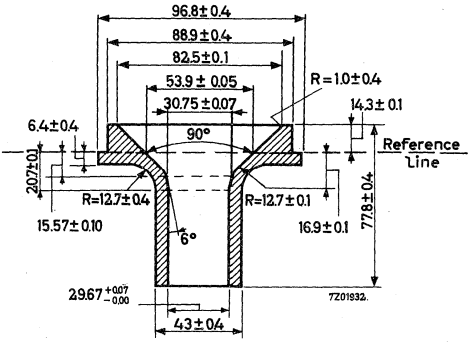

[1]) During a warm-up period not exceeding 15 s the heater may be 410 V negative with respect to the cathode.

MONITOR TUBE

The M24-101W is a 24 cm-diagonal rectangular television tube with integral protection primarily intended for use as a monitor or display tube.

QUICK REFERENCE DATA			
Deflection angle		90 °	
Focusing		electrostatic	
Resolution		900	lines
Overall length	≤	260	mm

SCREEN

Metal backed phosphor

Luminescence		white	
Light transmission of face glass		52	%
Useful diagonal	≥	225	mm
Useful width	≥	190	mm
Useful height	≥	140	mm

HEATING

Indirect by a.c. or d.c.; parallel supply

Heater voltage	V_f	6,3	V
Heater current	I_f	300	mA

FOCUSING

electrostatic

For focusing voltage providing optimum focus at a beam current of 100 μA see under "Typical operating conditions".

DEFLECTION

magnetic

Diagonal deflection angle	90 °
Horizontal deflection angle	80 °
Vertical deflection angle	65 °

Deflection coil AT1071/03 is recommended.

MECHANICAL DATA

Dimensions in mm

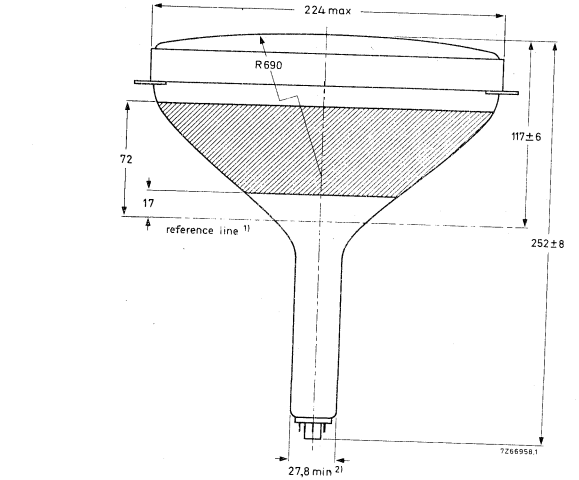

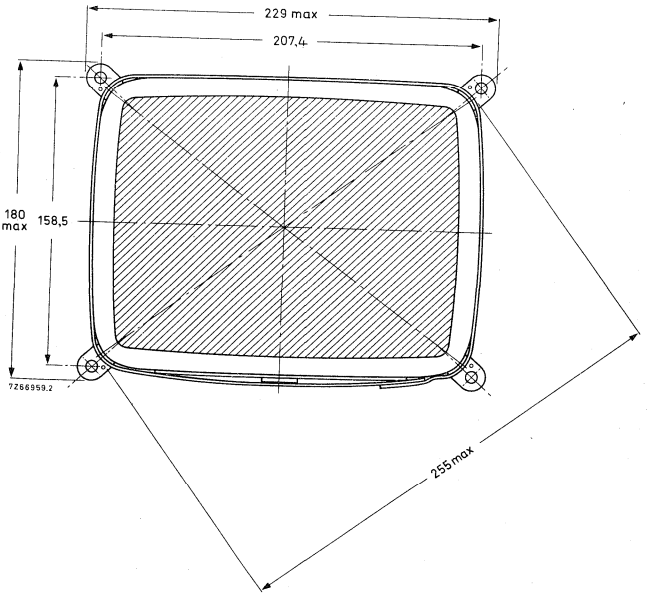

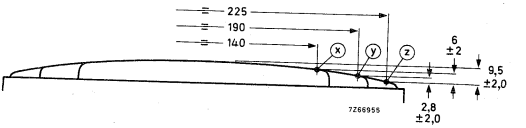

Notes see page 4.

MECHANICAL DATA (continued)

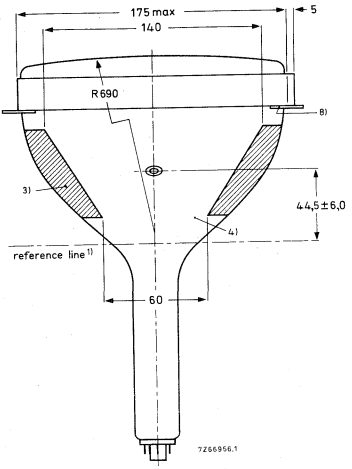

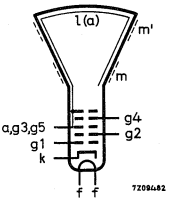

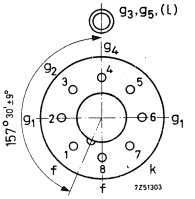

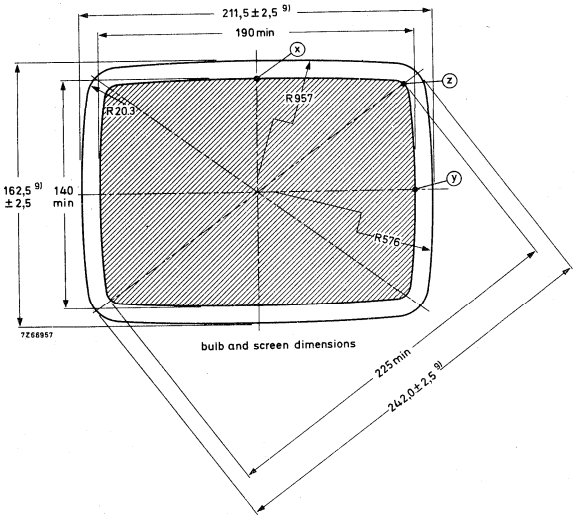

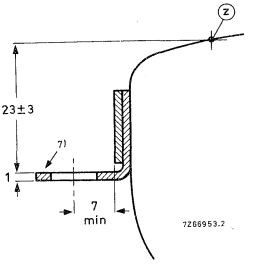

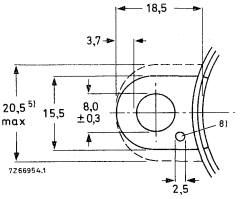

Notes see page 4.

MECHANICAL DATA (continued)

Mounting position : any

Base	Neo eightar (B8H), IEC 67-I-31a
Cavity contact	CT8, IEC67-III-2
Accessories	
Socket	2422 501 06001
Final accelerator contact connector	

PICTURE CENTRING MAGNET

Field intensity perpendicular to the tube axis adjustable from 0 to 800 A/m (0 to 10 Oe). Adjustment of the centring magnet should not cause a general reduction in brightness or shading of the raster.

NOTES TO OUTLINE DRAWINGS

1) The reference line is determined by the plane of the upper edge of the flange of the reference line gauge with the gauge resting on the cone.

2) The maximum dimension is determined by the reference line gauge.

3) This tube has an external conductive coating (m), which must be earthed. The capacitance of this coating to the final accelerator is used for smoothing the EHT. The tube marking and warning labels are on the side of the cone opposite the final accelerator contact, and this side should not be used for making contact to the conductive coating.

4) This area must be kept clean.

5) Minimum space to be reserved for mounting lugs.

6) The mounting screws in the cabinet must be situated within a circle with a diameter of 4 mm drawn around the true geometrical position (corners of a rectangle of 207,4 mm x 158,5 mm).

7) The maximum displacement of any lug with respect to the plane through the other three lugs is 2 mm.

8) The metal rim-band must be earthed. The hole of 2,5 mm diameter in each lug is provided for this purpose.

9) The bulge at the spliceline seal may increase the indicated maximum values for envelope width, diagonal and height by not more than 6,4 mm, but at any point around the seal the bulge will not protrude more than 3,2 mm beyond the envelope surface.

CAPACITANCES

Final accelerator to external conductive coating	$C_{g3,\ g5(\ell)/m}$		420	pF
Final accelerator to metal band	$C_{g3,\ g5(\ell)/m'}$		200	pF
Cathode to all other elements	C_k		5	pF
Control grid to all other elements	C_{g1}		7	pF

TYPICAL OPERATING CONDITIONS

Final accelerator voltage	$V_{g3,\ g5(\ell)}$			16	kV
Focusing electrode voltage	V_{g4}	0	to	400	V
First accelerator voltage	V_{g2}			600	V
Grid 1 voltage for extinction of focused raster	V_{g1}	-32	to	-85	V

RESOLUTION

Resolution at screen centre measured with the shrinking raster method (non-interlaced raster), under typical operating conditions, and at a beam current of 50 μA: 900 lines (luminance ≈200 cd/m^2).

If necessary, the picture quality can be improved by using a beam centring magnet. This magnet, catalogue number 3322 142 11401, can be supplied on request.

LIMITING VALUES (Absolute max. rating system)

Final accelerator voltage	$V_{g3,\ g5(\ell)}$	max.	18	kV	
		min.	10	kV	
Focusing electrode voltage, positive	V_{g4}	max.	1000	V	
negative	$-V_{g4}$	max.	500	V	
First accelerator voltage	V_{g2}	max.	800	V	
		min.	300	V	
Grid 1 voltage, negative	$-V_{g1}$	max.	150	V	
positive	V_{g1}	max.	0	V	
positive peak	V_{g1p}	max.	2	V	
Cathode to heater voltage, positive	V_{kf}	max.	250	V	
positive peak	V_{kfp}	max.	300	V	1)
negative	$-V_{kf}$	max.	135	V	
negative peak	$-V_{kfp}$	max.	180	V	

1) During a warm-up period not exceeding 15 s the heater may be 410 V negative with respect to the cathode.

REFERENCE LINE GAUGE

Dimensions in mm

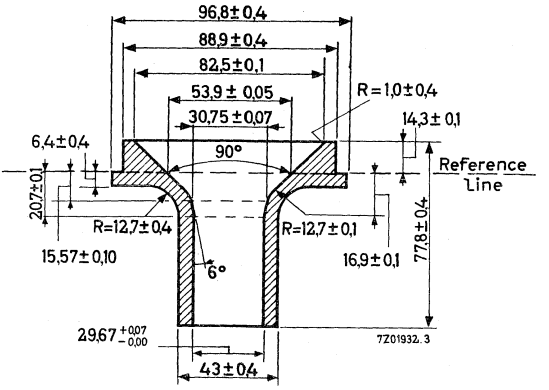

MONITOR TUBE

The M31-130W is a 31 cm-diagonal rectangular television tube with metal-backed screen primarily intended for use as a monitor or display tube.

QUICK REFERENCE DATA			
Deflection angle		90°	
Focusing		electrostatic	
Resolution		900	lines
Overall length	max.	310	mm

SCREEN

Metal-backed phosphor			
Luminescence		white	
Light transmission of face glass	approx.	50	%
Useful diagonal	min.	295	mm
Useful width	min.	257	mm
Useful height	min.	195	mm

HEATING

Indirect by a.c. or d.c.; parallel supply			
Heater voltage	V_f	6,3	V
Heater current	I_f	300	mA

FOCUSING electrostatic

For focusing voltage providing optimum focus at a beam current of 100 μA see under "Typical operating conditions".

DEFLECTION magnetic

Diagonal deflection angle 90°

Deflection coil AT1071/03 is recommended.

MECHANICAL DATA

Dimensions in mm

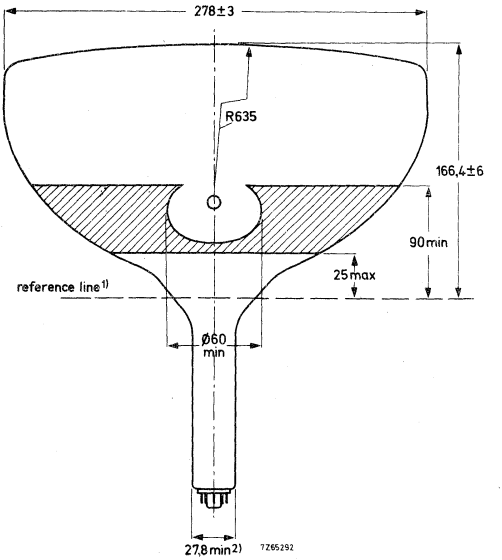

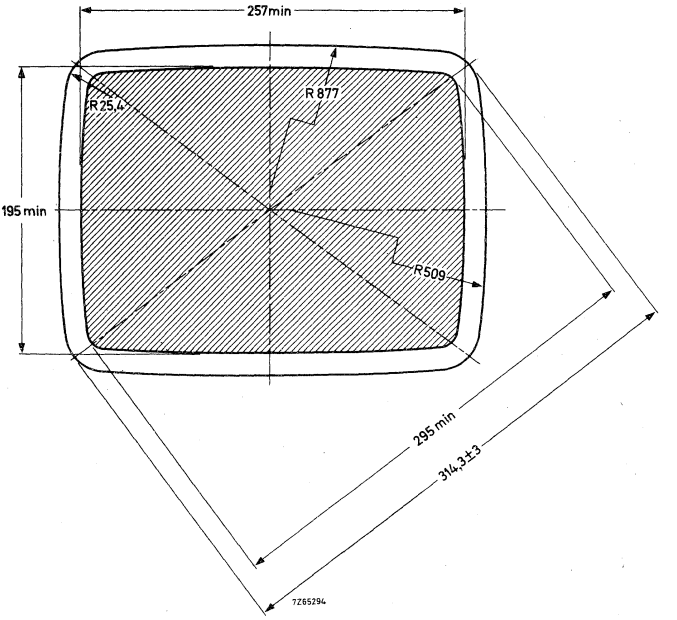

MECHANICAL DATA (continued)

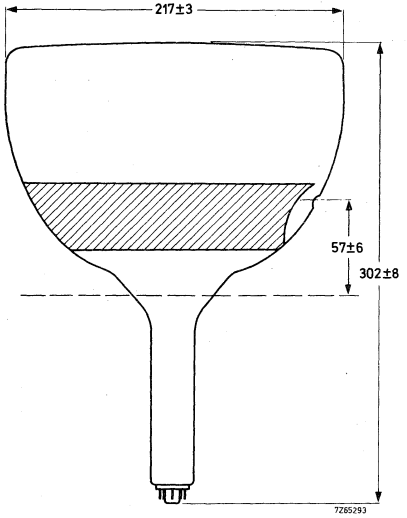

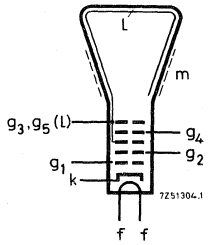

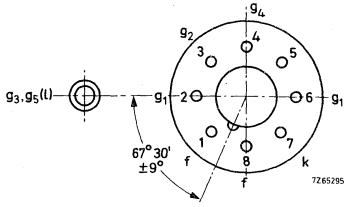

Mounting position: any, except vertical with the screen down and the axis of the tube making an angle of less than 20° with the vertical.

Base	Neo eightar (B8H), IEC67-I-31a
Cavity contact	CT8, IEC67-III-2
Accessories	
Socket	2422 501 06001
Final accelerator contact connector	type 55563A

CAPACITANCES

Final accelerator to external conductive coating	$C_{g3,\ g5(\ell)/m}$	1100	pF
Cathode to all other elements	C_k	5	pF
Control grid to all other elements	C_{g1}	7	pF

1) The reference line is determined by the plane of the upper edge of the flange of the reference line gauge with the gauge resting on the cone.

2) The maximum dimension is determined by the reference line gauge.

TYPICAL OPERATING CONDITIONS

Final accelerator voltage	$V_{g3,\,g5(\ell)}$	16	kV
Focusing electrode voltage	V_{g4}	0 to 400	V
First accelerator voltage	V_{g2}	600	V
Grid no. 1 voltage for extinction of focused raster	V_{g1}	−32 to −85	V

RESOLUTION

Resolution at screen centre measured with the shrinking raster method (non-interlaced raster), under typical operating conditions, and at a beam current of 50 μA: 900 lines
The resolution can be improved by the use of beam centring magnet, catalogue number 3322 142 11401, supplied on request.

LIMITING VALUES (Absolute max. rating system)

Final accelerator voltage	$V_{g3,\,g5(\ell)}$	max.	18	kV
		min.	10	kV
Focusing electrode voltage, positive	V_{g4}	max.	1000	V
	$-V_{g4}$	max.	500	V
First accelerator voltage	V_{g2}	max.	800	V
		min.	300	V
Grid no. 1 voltage, negative	$-V_{g1}$	max.	150	V
positive	V_{g1}	max.	0	V
positive peak	V_{g1p}	max.	2	V
Cathode to heater voltage, positive	V_{kf}	max.	250	V
positive peak	V_{kfp}	max.	300	V [1]
negative	$-V_{kf}$	max.	135	V
negative peak	$-V_{kfp}$	max.	180	V

REFERENCE LINE GAUGE

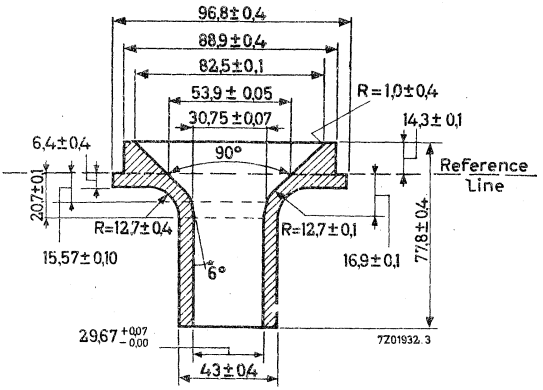

[1] During a warm-up period not exceeding 15 s the heater may be 410 V negative with respect to the cathode.

MONITOR TUBE

The M31-131W is a 31 cm-diagonal rectangular television tube with integral protection primarily intended for use as a monitor or display tube.

QUICK REFERENCE DATA			
Deflection angle		90 °	
Focusing		electrostatic	
Resolution		900	lines
Overall length	≤	310	mm

SCREEN

Metal backed phosphor

Luminescence		white	
Light transmission of face glass		approx. 50	%
Useful diagonal	≥	295	mm
Useful width	≥	257	mm
Useful height	≥	195	mm

HEATING

Indirect by a.c. or d.c.; parallel supply

Heater voltage	V_f	6,3	V
Heater current	I_f	300	mA

FOCUSING electrostatic

For focusing voltage providing optimum focus at a beam current of 100 μA see under "Typical operating conditions".

DEFLECTION magnetic

Diagonal deflection angle 90 °

Deflection coil AT1071/03 is recommended.

MECHANICAL DATA

Dimensions in mm

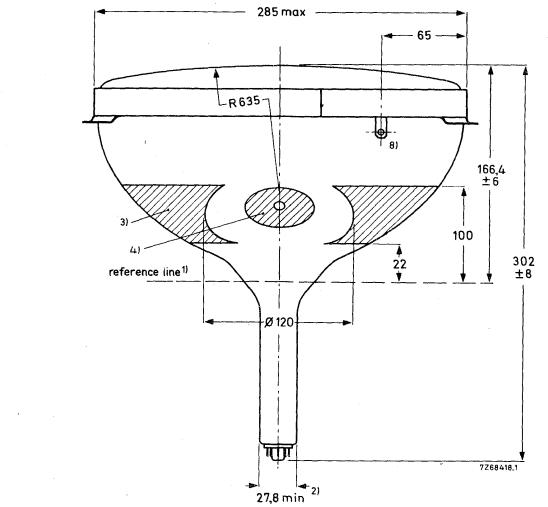

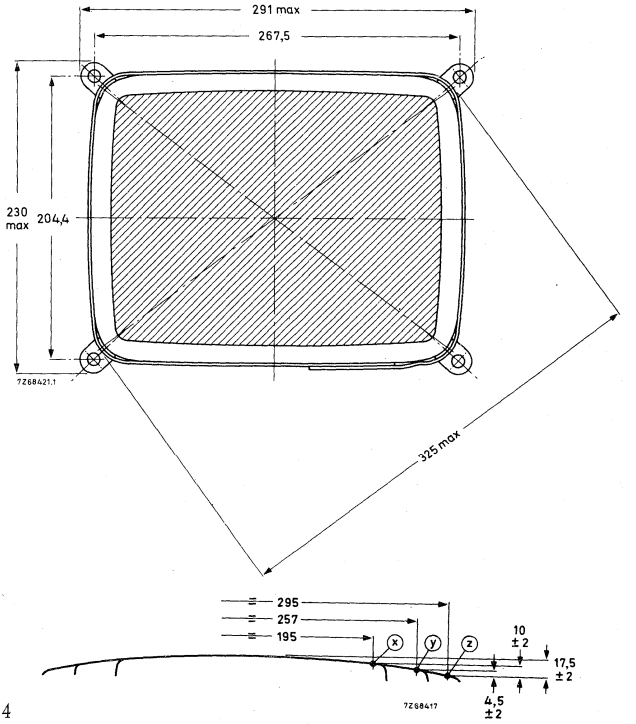

Notes see page 4

MECHANICAL DATA (continued)

Dimensions in mm

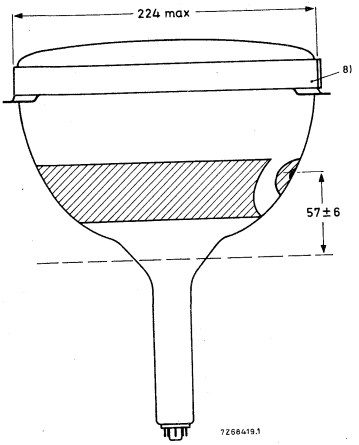

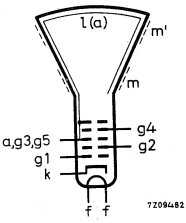

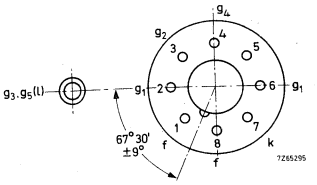

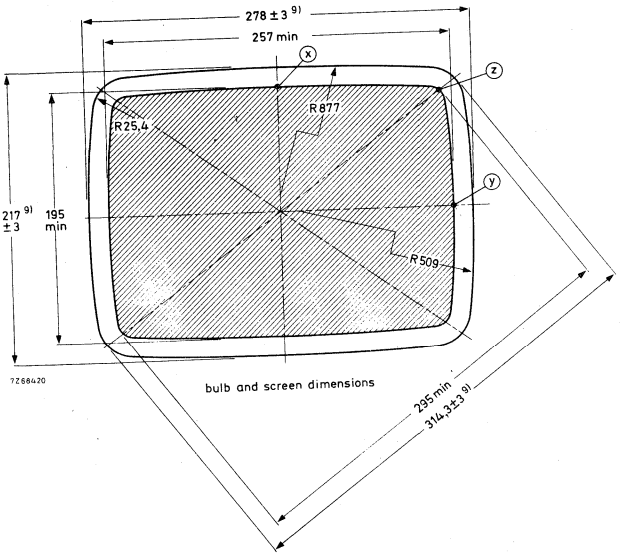

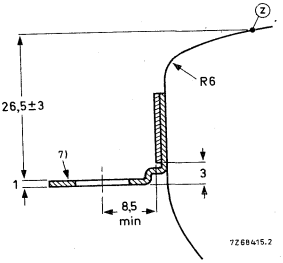

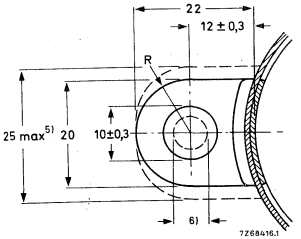

Notes see page 4.

MECHANICAL DATA (continued)

Mounting position : any	
Base	Neo eightar (B8H), IEC 67-I-31a
Cavity contact	CT8, IEC 67-III-2
Accessories	
Socket	2422 501 06001
Final accelerator contact connector	type 55563A

PICTURE CENTRING MAGNET

Field intensity perpendicular to the tube axis adjustable from 0 to 800 A/m (0 to 10 Oe). Adjustment of the centring magnet should not cause a general reduction in brightness or shading the raster.

NOTES TO OUTLINE DRAWINGS

1) The reference line is determined by the plane of the upper edge of the flange of the reference line gauge with the gauge resting on the cone.
2) The maximum dimension is determined by the reference line gauge.
3) This tube has a external conductive coating (m), which must be earthed. The capacitance of this coating to the final accelerator is used for smoothing the EHT. The tube marking and warning labels are on the side of the cone opposite the final accelerator contact, and this side should not be used for making contact to the conductive coating.
4) This area must be kept clean.
5) Minimum space to be reserved for mounting lugs.
6) The mounting screws in the cabinet must be situated within a circle with a diameter of 6 mm drawn around the true geometrical position (corners of a rectangle of 267, 5 mm x 204, 4 mm).
7) The maximum displacement of any lug, with respect to the plane through the other three lugs is 2 mm.
8) The metal rim-band must be earthed. For this purpose the band is provided with a tag.
9) The bulge of the spliceline seal may increase the indicated maximum values for envelope width, diagonal, and height by not more than 6, 4 mm, but at any point around the seal the bulge will not protrude more than 3, 2 mm beyond the envelope surface.

CAPACITANCES

Final accelerator to external conductive coating	$C_{g3,\ g5(\ell)}$/m	1200	pF
Final accelerator to metal band	$C_{g3,\ g5(\ell)}$/m	150	pF
Cathode to all other elements	C_k	5	pF
Control grid to all other elements	C_{g1}	7	pF

TYPICAL OPERATING CONDITIONS

Final accelerator voltage	$V_{g3,\ g5(\ell)}$	16	kV
Focusing electrode voltage	V_{g4}	0 to 400	V
First accelerator voltage	V_{g2}	600	V
Grid 1 voltage for extinction of focused raster	V_{g1}	-32 to -85	V

RESOLUTION

Resolution at screen centre measured with the shrinking raster method (non-interlaced raster), under typical operating conditions, and at a beam current of 50 μA: 900 lines

If necessary, the picture quality can be improved by using a beam centring magnet. This magnet, catalogue number 3322 142 11401, can be supplied on request.

LIMITING VALUES (Absolute max. rating system)

Final accelerator voltage	$V_{g3,\ g5(\ell)}$	max.	18	kV
		min.	10	kV
Focusing electrode voltage, positive	V_{g4}	max.	1000	V
negative	$-V_{g4}$	max.	500	V
First accelerator voltage	V_{g2}	max.	800	V
		min.	300	V
Grid voltage, negative	$-V_{g1}$	max.	150	V
positive	V_{g1}	max.	0	V
positive peak	V_{g1p}	max.	2	V
Cathode to heater voltage, positive	V_{kf}	max.	250	V
positive peak	V_{kfp}	max.	300	V
negative	$-V_{kf}$	max.	135	V [1)]
negative peak	$-V_{kfp}$	max.	180	V

1) During a warm-up period not exceeding 15 s the heater may be 410 V negative with respect to the cathode.

REFERENCE LINE GAUGE

Dimensions in mm

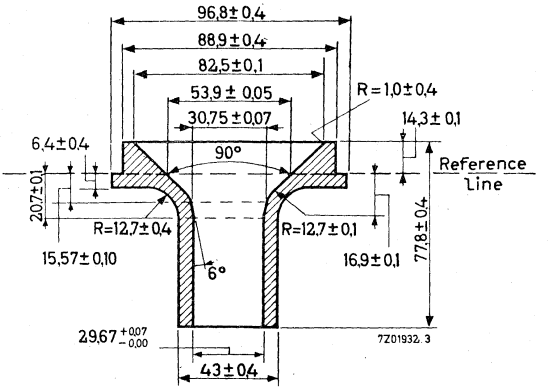

MONITOR TUBE

The M38-120W is a 38 cm-diagonal rectangular television tube with metal backed screen and integral protection primarily intended for use as a monitor tube.
On request this tube can also be supplied with a WA screen phosphor.

QUICK REFERENCE DATA		
Deflection angle	110 °	
Focusing	electrostatic	
Resolution	min. 650	lines
Overall length	max. 279,5	mm

SCREEN

Metal backed phosphor		
Luminescence	white	
Light transmission of face glass	50	%
Useful diagonal	min. 350	mm
Useful width	min. 290	mm
Useful height	min. 226	mm

HEATING

Indirect by a.c. or d.c.; parallel or series supply

Heater voltage	V_f	6,3	V
Heater current	I_f	300	mA

FOCUSING electrostatic

For focusing voltage providing optimum focus at screen centre at a beam current of 100 μA see under "Typical operating conditions".

DEFLECTION magnetic

Diagonal deflection angle	110 °
Horizontal deflection angle	93 °
Vertical deflection angle	76 °

Deflection coil AT1038/40 is recommended.

MECHANICAL DATA

Dimensions in mm

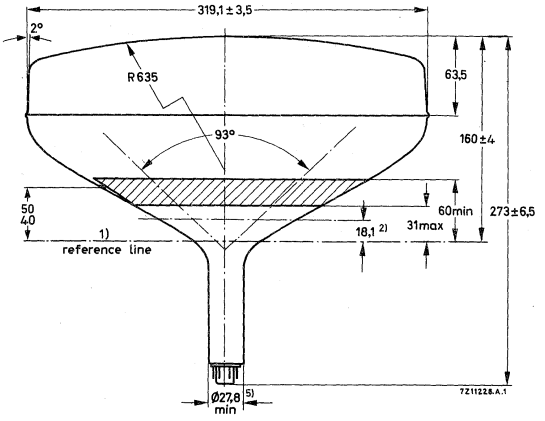

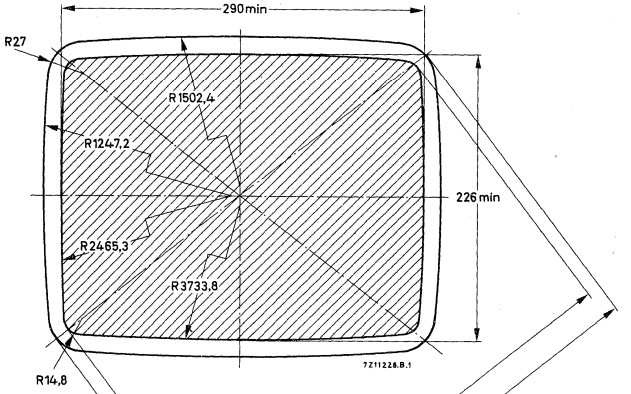

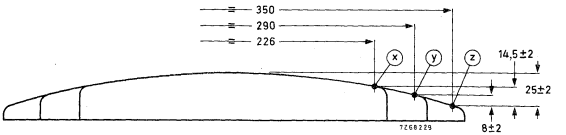

MECHANICAL DATA (continued)

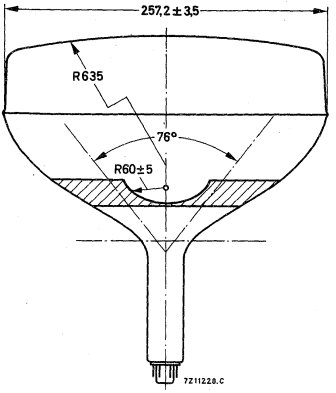

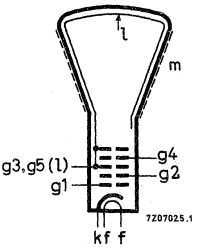

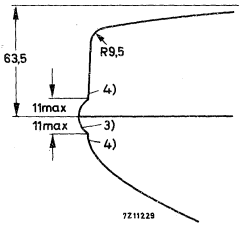

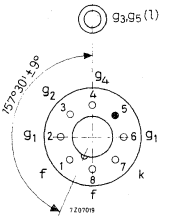

Mounting position: any

Base	Neo eightar (B8H), IEC67-I-31a
Cavity contact	CT8, IEC67-III-2
Accessories	
Final accelerator contact connector	type 55563A
Socket	2422 501 06001

NOTES TO OUTLINE DRAWING

1) The reference line is determined by the plane of the upper edge of the flange of reference line gauge, (JEDEC126) when the gauge is resting on the cone.

2) End of guaranteed contour. The maximum neck and cone contour is given by the Reference line gauge (see page 4).

3) Bulge at splice-line seal may increase the indicated maximum value for envelope width, diagonal and height by not more than 6,4 mm, but at any point around the seal, the bulge will not protrude more than 3,2 mm beyond the envelope surface at the location specified for dimensioning the envelope width, diagonal and height.

4) The tube should be supported on both sides of the bulge. The mechanism used should provide clearance for the maximum dimensions of the bulge.

5) The maximum dimension is determined by the reference line gauge

PICTURE CENTRING MAGNET

Field intensity perpendicular to the tube axis adjustable from 0 to 800 A/m (0 to 10 oersted). Adjustment of the centring magnet should not be such that a general reduction in brightness or shading of the raster occurs.

CAPACITANCE

Control grid to all other elements	C_{g_1}	6,0	pF
Cathode to all other elements	C_k	5,0	pF
Final accelerator to external conductive coating	$C_{g_3,g_5(\ell)}$/m	600	pF

TYPICAL OPERATING CONDITIONS

Final accelerator voltage	$V_{g_3,g_5(\ell)}$	16	kV
Focusing electrode voltage	V_{g_4}	0 to 400	V [1]
First accelerator voltage	V_{g_2}	400	V
Grid No. 1 voltage for visual extinction of a focused raster	$-V_{g_1}$	40 to 85	V

RESOLUTION

Resolution at screen centre, measured with the shrinking raster method (non-interlaced raster), under typical operating conditions, a beam current of 100 μA, and focusing voltage adjusted for optimum spot size — min. 650 lines

LIMITING VALUES (Absolute max. rating system)

Voltages are specified with respect to cathode unless otherwise stated.

Final accelerator voltage	$V_{g_3,g_5(\ell)}$	max.	18	kV
		min.	13	kV
Focusing electrode voltage	V_{g_4}	max.	1	kV
	$-V_{g_4}$	max.	0,5	kV
First accelerator voltage	V_{g_2}	max.	550	V
		min.	350	V
Control grid voltage, negative	$-V_{g_1}$	max.	150	V
positive	V_{g_1}	max.	0	V
positive peak	$V_{g_{1_p}}$	max.	2	V
Cathode to heater voltage, positive	V_{kf}	max.	250	V
positive peak	V_{kf_p}	max.	300	V
negative	$-V_{kf}$	max.	135	V
negative peak	$-V_{kf_p}$	max.	180	V

[1]) With the small change in focus spot size with variation of focus voltage the limit of 0 to 400 V is such that an acceptable focus quality is obtained within this range. If it is required to pass through the point of focus, a voltage of at least −100 V to +500 V will be required.

CIRCUIT DESIGN VALUES

Focusing electrode current, positive	I_{g_4}	max.	25	µA
negative	$-I_{g_4}$	max.	25	µA
Grid no. 2 current, positive	I_{g_2}	max.	5	µA
negative	$-I_{g_2}$	max.	5	µA

MAXIMUM CIRCUIT VALUES

Resistance between cathode and heater	R_{kf}	max.	1	MΩ
Impedance between cathode and heater (f = 50 Hz)	Z_{kf}	max.	500	kΩ
Resistance between grid no. 1 and earth	R_{g_1}	max.	1,5	MΩ
Impedance between cathode and earth (f = 50 Hz)	Z_k	max.	100	kΩ

WARNING

X-ray shielding is advisable to give protection against possible danger of personal injury arising from prolonged exposure at close range to this tube when operated above 16 kV.

EXTERNAL CONDUCTIVE COATING

This tube has an external conductive coating (m), which must be earthed and capacitance of this to the final electrode is used to provide smoothing for the EHT supply. The tube marking and warning labels are on the side of the cone opposite the final electrode connector and this side should not be used for making contact to the external conductive coating.

REFERENCE LINE GAUGE

Dimensions in mm

JEDEC126

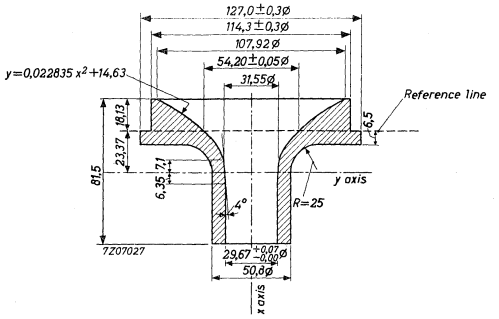

REMARK

With the high voltage used with this tube internal flash-overs may occur. These may destroy the cathode of the tube. Therefore it is necessary to provide protective circuits, using spark gaps.
The spark gaps must be connected as follows:

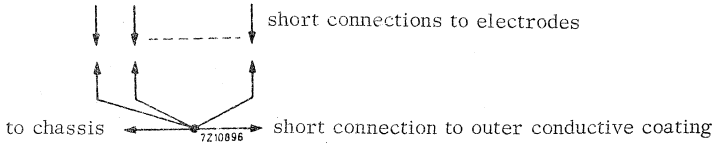

No other connections between the outer conductive coating and the chassis are permissible.

On request the tube can be supplied with spark traps mounted in the base (ring trap base).

MONITOR TUBE

The M38-121 is a 38 cm-diagonal rectangular television tube with metal backed screen and integral protection primarily intended for use as a monitor or display tube.

QUICK REFERENCE DATA			
Deflection angle		110 °	
Focusing		electrostatic	
Resolution	min.	650	lines
Overall length	max.	279,5	mm

SCREEN

Metal backed phosphor

Luminescence		white	
Light transmission of face glass		50	%
Useful diagonal	min.	350	mm
Useful width	min.	290	mm
Useful height	min.	226	mm

HEATING

Indirect by a.c. or d.c.; parallel or series supply

Heater voltage	V_f	6,3	V
Heater current	I_f	300	mA

FOCUSING electrostatic

For focusing voltage providing optimum focus at screen centre at a beam current of 100 μA see under "Typical operating conditions".

DEFLECTION magnetic

Diagonal deflection angle	110 °
Horizontal deflection angle	93°
Vertical deflection angle	76°

Deflection coil AT1038/40 is recommended.

MECHANICAL DATA

Dimensions in mm

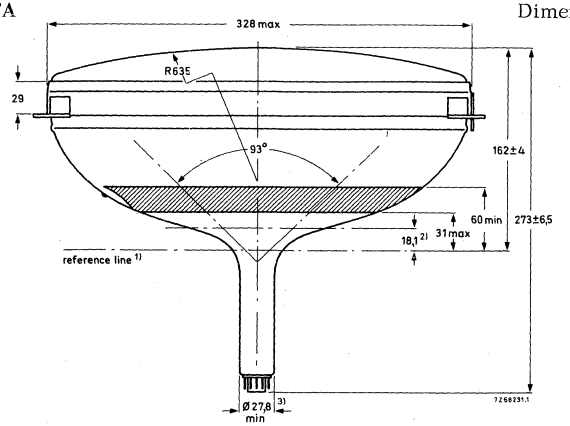

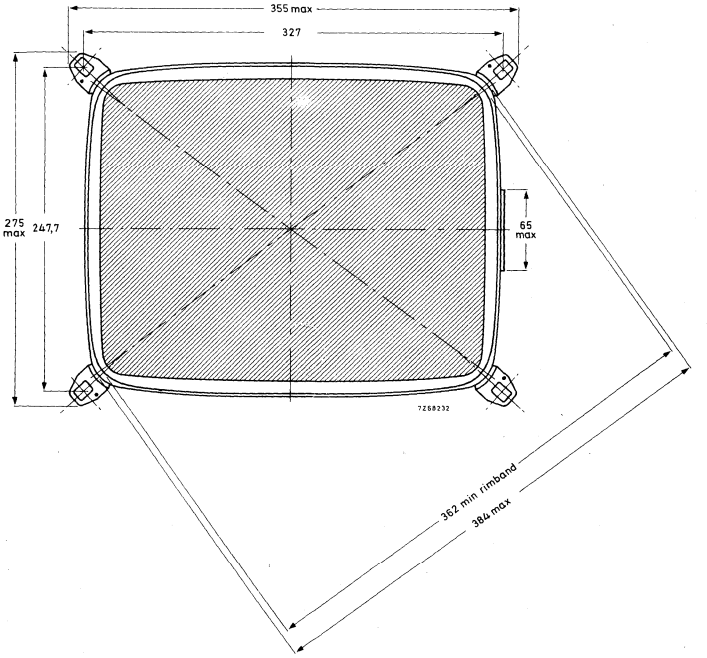

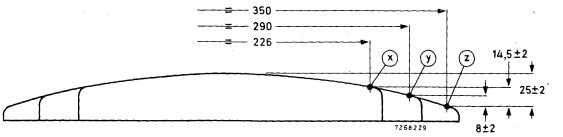

MECHANICAL DATA (continued)

Dimensions in mm

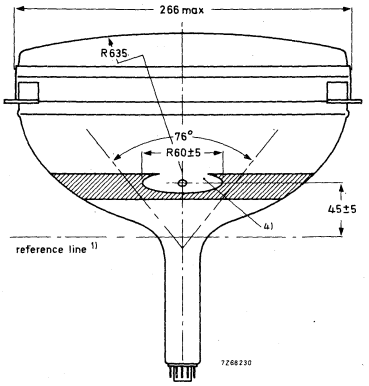

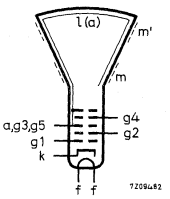

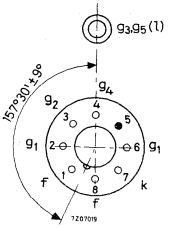

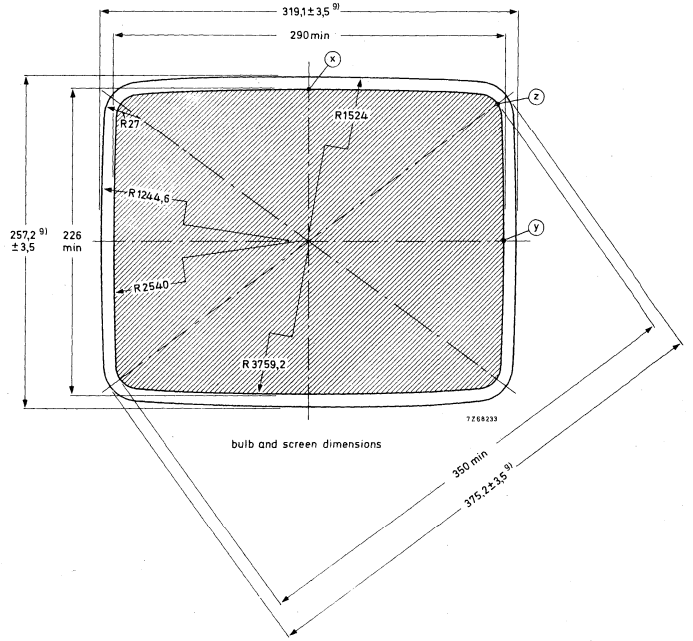

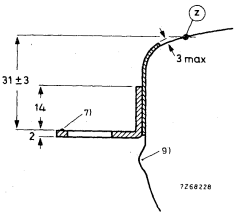

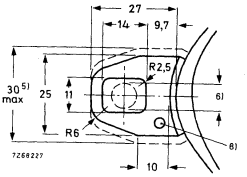

MECHANICAL DATA (continued)

Mounting position: any

Base	Neo eightar (B8H), IEC67-I-31a
Cavity contact	CT8, IEC67-III-2
Accessories	
Socket	2422 501 06001
Final accelerator contact connector	type 55563

PICTURE CENTRING MAGNET

Field intensity perpendicular to the tube axis from 0 to 800 A/m (0 to 10 Oe). Adjustment of the centring magnet should not cause a general reduction in brightness or shading of the raster.

NOTES TO OUTLINE DRAWING

1) The reference line is determined by the plane of the upper edge of the flange of the reference line gauge, (JEDEC 126) when the gauge is resting on the cone.

2) End of guaranteed contour. The maximum neck and cone countour is given by the reference line gauge.

3) The maximum dimension is given by the reference line gauge.

4) This area must be kept clean.

5) Minimum space to the reserved for mounting lugs.

6) The mounting screws in the cabinet must be situated within a circle with a diameter of 7,5 mm drawn around the true geometrical positions(corners of a rectangle of 327 mm x 247,7 mm).

7) The maximum displacement of any lug with respect to the plane trough the other three lugs is 2 mm.

8) The metal rimband must be earthed. Holes of 3 mm diameter in each lug are provided for this purpose.

9) The bulge at the pliceline seal may increase the indicated maximum value for envelope width, diagonal and height by not more than 6,4 mm, but at any point around the seal the bulge will not protrude more than 3,2 mm beyond the envelope surface.

CAPACITANCES

Final accelerator to external conductive coating	$C_{g3,\,g5(\ell)/m}$	450 to 650	pF
Final accelerator to metal band	$C_{g3,\,g58\ell 9/m'}$	240	pF
Cathode to all other elements	C_k	5	pF
Control grid to all other elements	C_{g1}	6	pF

TYPICAL OPERATING CONDITIONS

Final accelerator voltage	$V_{g3,\,g5(\ell)}$	16	kV
Focusing electrode voltage	V_{g4}	0 to 400	V [1]
First accelerator voltage	V_{g2}	400	V
Grid No. 1 voltage for visual extinction of a focused raster	V_{g1}	40 to 85	V

RESOLUTION

Resolution at screen centre, measured with the shrinking raster method (non-interlaced raster), under typical operating conditions, a beam current of 100 μA, and focusing voltage adjusted for optimum spot size — min. 650 lines

LIMITING VALUES (Absolute max. rating system)

Voltages are specified with respect to cathode unless otherwise stated.

Final accelerator voltage	$V_{g3,\,g5(\ell)}$	max. 18 min. 13	kV kV
Focusing electrode voltage	V_{g4} $-V_{g4}$	max. 1000 max. 500	V V
First accelerator voltage	V_{g2}	max. 550 min. 350	V V
Control grid voltage, negative	$-V_{g1}$	max. 150	V
positive	V_{g1}	max. 0	V
positive peak	V_{g1p}	max. 2	V
Cathode to heater voltage, positive	V_{kf}	max. 250	V
positive peak	V_{kfp}	max. 300	V
negative	$-V_{kf}$	max. 135	V
negative peak	$-V_{kfp}$	max. 180	V

[1]) With the small change in focus spot size with variation of focus voltage the limit of 0 to 400 V is such that an acceptable focus quality is obtained within this range. If it is required to pass through the point of focus, a voltage range of at least -100 to +500 V will be required.

CIRCUIT DESIGN VALUES

Focusing electrode current, positive	I_{g4}	max.	25	µA
negative	$-I_{g4}$	max.	25	µA
Grid No. 2 current, positive	I_{g2}	max.	5	µA
negative	$-I_{g2}$	max.	5	µA

MAXIMUM CIRCUIT VALUES

Resistance between cathode and heater	R_{kf}	max.	1	MΩ
Impedance between cathode and heater (f = 50 Hz)	Z_{kf}	max.	500	kΩ
Resistance between grid no. 1 and earth	R_{g1}	max.	1,5	MΩ
Impedance between cathode and earth (f = 50 Hz)	Z_k	max.	100	kΩ

WARNING

X-ray shielding is advisable to give protection against possible danger of personal injury arising from prolonged exposure at close range to this tube when operated above 16 kV.

EXTERNAL CONDUCTIVE COATING

This tube has an external conductive coating (m), wich must be earthed and capacitance of this to the final electrode is used to provide smoothing for the EHT supply. The tube marking and warning labels are on the side of the cone opposite the final electrode connector and this side should not be used for making contact to the external conductive coating.

REFERENCE LINE GAUGE

Dimensions in mm

JEDEC 126

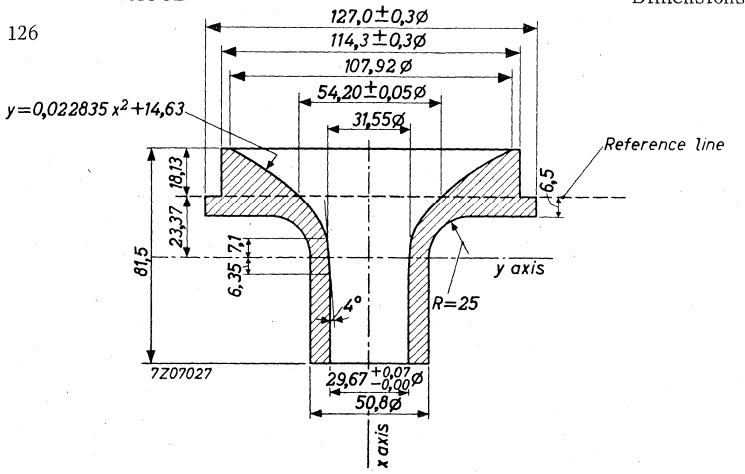

REMARK

With the high voltage used with this tube internal flash-overs may occur. These may destroy the cathode of the tube. Therefore it is necessary to provide protective circuits, using spark gaps.
The spark gaps must be connected as follows:

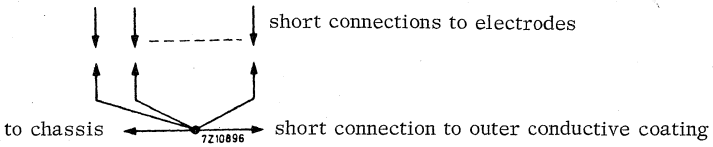

No other connections between the outer conductive coating and the chassis are permissible.

On request the tube can be supplied with spark traps mounted in the base (ring trap base).

CRTs FOR SPECIAL APPLICATIONS

PROJECTION TUBE

The M. 13-38 is a 13 cm diameter projection tube designed for large screen projection of colour TV displays.

QUICK REFERENCE DATA			
Final accelerator voltage	$V_{g2(\ell)}$	50	kV
Deflection angle		47	deg
Focusing		magnetic	

SCREEN

Type	MG13-38	MU13-38	MY13-38
Colour	green	blue	red
Colour point	x = 0,19 y = 0,72	x = 0,17 y = 0,13	x = 0,66 y = 0,33
Useful screen area			92 x 69 mm^2

Luminance

MG13-38	2000	mcd/cm^2
MU13-38	290	mcd/cm^2
MY13-38	600	mcd/cm^2

measured at $V_{g2(\ell)}$ = 50 kV; I_ℓ = 500 µA, raster size 92 mm x 69 mm

HEATING

Indirect by a.c. or d.c.; parallel series supply

Heater voltage	V_f	6,3	V
Heater current	I_f	300	mA

CAPACITANCES

Control grid to all other elements	C_{g1}	< 10	pF
Cathode to all other elements	C_k	< 9	pF

MECHANICAL DATA

Dimensions in mm

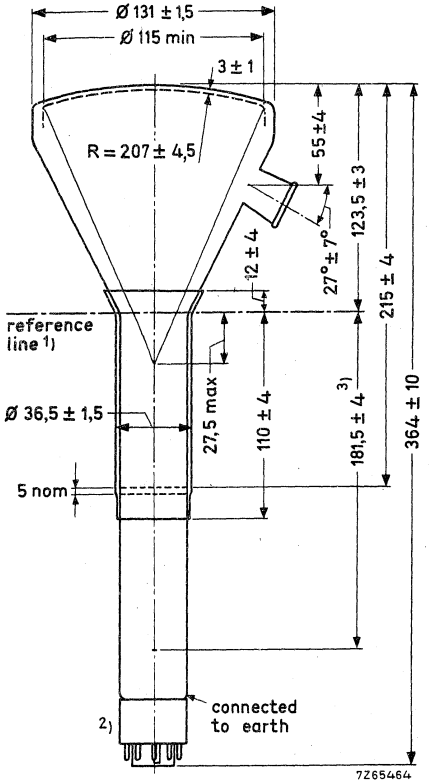

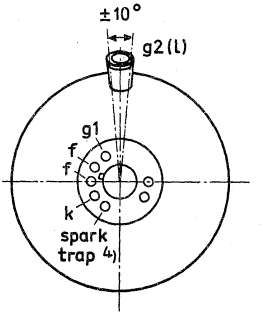

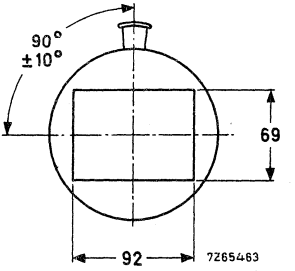

1) The reference line is determined by the position where a gauge 38,1 $^{+0,05}_{-0,00}$ mm diameter and 50 mm long will rest on the cone of the envelope.

2) The socket for this base should not be rigidly mounted; it should have flexible leads and be allowed to move freely. The bottom circumreference of the base shell will fall within a circle with a diameter of 50 mm concentric with the cone axis.

3) Distance reference line to top-centre of grid.

4) This pin must be connected to earth.

MECHANICAL DATA (continued)

Mounting position: any, except screen downwards with the axis at an angle of less than 50° to the vertical.
The tube should not be supported by the base alone and under no condition should the socket be allowed to support the tube.

Base	Duodecal 7 p
Dimensions and connections	
Overall length	max. 374 mm
Face diameter	max. 132,5 mm
Net mass	approx. 950 g
Accessories	
Socket	type 5912/20
Final accelerator contact connector	supplied with tube* ←

FOCUSING magnetic

Distance from the centre of the air gap of the focusing coil to the front of the screen 240 mm

DEFLECTION double magnetic
deflection angle 47°

TYPICAL OPERATING CONDITIONS

Accelerator voltage	$V_{g2(\ell)}$	50	kV
Control grid voltage for visual extinction of a focused raster	V_{g1}	−100 to −170	V ←
Peak accelerator current	I_{g2_p}	min. 2500	μA

* If a tube is replaced, the final accelerator contact connector has also to be replaced.

LIMITING VALUES (Absolute max. rating system)

Measured with respect to cathode

Accelerator voltage	$V_{g2(\ell)}$	max. min.	55 40	kV kV
Control grid voltage,				
negative	$-V_{g1}$	max.	200	V
positive	V_{g1}	max.	0	V
positive peak	V_{g1_p}	max.	0	V
Accelerator current	$I_{g2(\ell)}$	max.	500	μA [1]
Cathode to heater voltage,				
cathode positive	V_{kf}	max.	100	V [2]
cathode negative	$-V_{kf}$	max.	50	V
Resistance between heater and cathode	R_{kf}	max.	20	kΩ
Resistance between grid no. 1 and earth	R_{g1}	max.	1,5	MΩ
Impedance between grid no. 1 and earth (f = 50 Hz)	Z_{g1}	max.	0,5	MΩ

1) To prevent the possible occurrence of cracked faces the accelerator should be kept lower than the indicated value for images with concentrated bright areas (high screen loads). This applies particulary for stationary pictures.

2) To avoid excessive hum, the A.C. component of the heater to cathode voltage should be as low as possible and must not exceed a r.m.s. value of 20 V.

GENERAL OBSERVATIONS

It is essential that means be provided for the instantaneous removal of the beam current if either one or both time-bases should fail. Unless such a safety device is incorporated, a failure of this type will immediately destroy the screen of the tube.

Shielding, equivalent to a lead thickness of 1 mm, is required to protect the observer against X-radiation.

The raster dimensions should not come below the minimum of 92 x 69 mm^2.

The screen shall be given adequate cooling by exposure to a continuous airblast of approx. 0,06 m^3/s.

To prevent damage to the tube caused by a momentary internal arc, a resistor of 50 kΩ must be connected between the anode contact and the power supply.

Before removing the tube, the screen and the cone should be discharged.

The spark trap and the outer coating of the tube must be connected to earth.

It is recommend to use the E.H.T. connector supplied with each tube.

It is necessary to centre the focusing coil for optimum sharpness.

PROJECTION TUBE

The MW13-38 is a 13 cm diameter projection tube designed for large screen projection of TV displays.

QUICK REFERENCE DATA			
Final accelerator voltage	$V_{g2(\ell)}$	50	kV
Deflection angle		47	deg
Focusing		magnetic	

SCREEN

Metal backed

Colour		white	
Useful screen area		92 x 69	mm^2
Luminance		870	mcd/cm^2

measured at $V_{g2(\ell)}$ = 50 kV
I_ℓ = 500 µA
raster size 92 x 69 mm^2

HEATING

Indirect by a.c. or d.c.; parallel series supply

Heater voltage	V_f		6,3	V
Heater current	I_f		300	mA

CAPACITANCES

Control grid to all other elements	C_{g1}	<	10	pF
Cathode to all other elements	C_k	<	9	pF

MECHANICAL DATA

Dimensions in mm

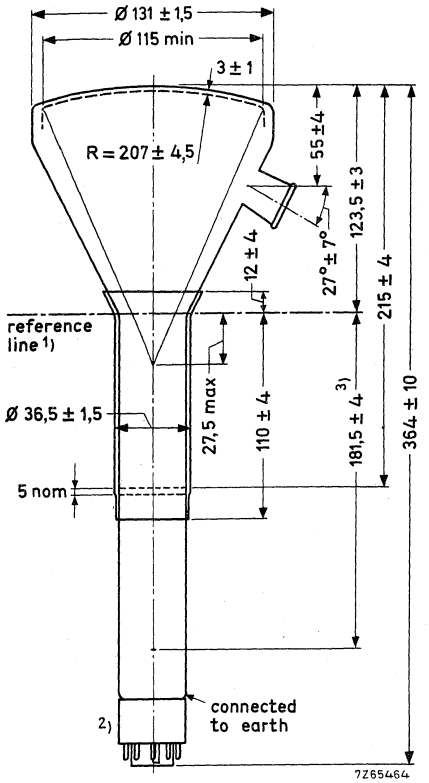

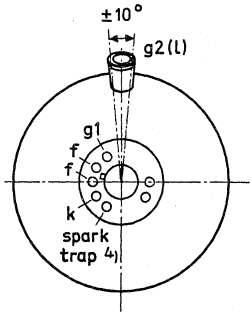

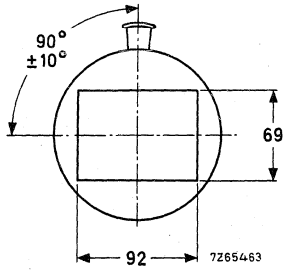

1) The reference line is determined by the position where a gauge 38,1 $^{+0,05}_{-0,00}$ mm diameter and 50 mm long will rest on the cone of the envelope.

2) The socket for this base should not be rigidly mounted; it should have flexible leads and be allowed to move freely. The bottom circumreference of the base shell will fall within a circle with a diameter of 50 mm concentric with the cone axis.

3) Distance reference line to top-centre of grid.

4) This pin must be connected to earth.

MECHANICAL DATA (continued)

Mounting position: any, except with screen downwards with the axis at an angle of less than 50° to the vertical.
The tube should not be supported by the base alone and under no circumstances should the socket be allowed to support the tube.

Base	Duodecal 7 p
Dimensions and connections	
Overall length	max. 374 mm
Face diameter	max. 132,5 mm
Net weight	approx. 950 g
Accessories	
Socket	type 5912/20
Final accelerator contact connector	supplied with tube*

FOCUSING magnetic

Distance from the centre of the air gap of the focusing coil to the front of the screen: 240 mm

DEFLECTION double magnetic

deflection angle 47°

TYPICAL OPERATING CONDITIONS

Accelerator voltage	$V_{g2(\ell)}$	50	kV
Control grid voltage for visual extinction of focused raster	V_{g1}	−100 to −170	V
Peak accelerator current	$I_{g2(\ell)_p}$	min. 2500	μA

*If a tube is replaced, the final accelerator contact connector has also to be replaced.

LIMITING VALUES (Absolute max. rating system)

Measured with respect to cathode

Accelerator voltage	$V_{g2(\ell)}$	max. min.	55 40	kV kV
Control grid voltage,				
negative	$-V_{g1}$	max.	200	V
positive	V_{g1}	max.	0	V
positive peak	V_{g1_p}	max.	0	V
Accelerator current	$I_{g2(\ell)}$	max.	500	µA [1]
Cathode to heater voltage,				
cathode positive	V_{kf}	max.	100	V
cathode negative	$-V_{kf}$	max.	50	V [2]
Resistance between heater and cathode	R_{kf}	max.	20	kΩ
Resistance between grid no. 1 and earth	R_{g1}	max.	1,5	MΩ
Impedance between grid no. 1 and earth (f = 50 Hz)	Z_{g1}	max.	0,5	MΩ

1) To prevent the possible occurrence of cracked faces, the accelerator current should be kept lower than the indicated value for images with concentrated bright areas (high screen loads). This applies particularly for stationary pictures.

2) To avoid excessive hum, the A.C. component of the heater to cathode voltage should be as low as possible and must not exceed a r.m.s. value of 20 V.

GENERAL OBSERVATIONS

It is essential that means be provided for the instantaneous removal of the beam current if either one or both time-bases should fail. Unless such a safety device is incorporated, a failure of this type will immediately destroy the screen of the tube.

Shielding, equivalent to a lead thickness of 1 mm, is required to protect the observer against X-radiation.

The raster dimensions should not come below the minimum of 92 x 69 mm^2.

The screen shall be given adequate cooling by exposure to a continuous airblast of approx. 0,06 m^3/s.

To prevent damage to the tube caused by a momentary internal arc, a resistor of 50 kΩ must be connected between the anode contact and the power supply.

Before removing the tube, the screen and the cone should be discharged.

The spark trap and the outer coating of the tube must be connected to earth.

It is recommend to use the E.H.T. connector supplied with each tube.

It is necessary to centre the focusing coil for optimum sharpness.

FLYING SPOT SCANNER TUBE

The Q7-100GU is an 7 cm diameter cathode-ray tube intended for flying spot scanner applications.

QUICK REFERENCE DATA		
Final accelerator voltage	16	kV
Deflection angle	36	deg
Resolution	400	lines

SCREEN

Metal-backed phosphor

	Colour	Persistence
Q7-100GU	White	Very short

Useful screen diameter min. 60 mm

HEATING : indirect, by a.c. or d.c.; parallel supply

Heater voltage	V_f	6,3	V
Heater current	I_f	300	mA

CAPACITANCES

Grid no. 1 to all other electrodes	C_{g_1}	7,5	pF
Cathode to all other electrodes	C_k	5,5	pF
Final accelerator to outer conductive coating	$C_{g3,\ell}$ /m	300	pF

FOCUSING electrostatic

DEFLECTION magnetic

Deflection angle 36 deg

ACCESSORIES

Final accelerator contact connector type 55563A

Insulating cap provided with tube

MECHANICAL DATA

Dimensions in mm

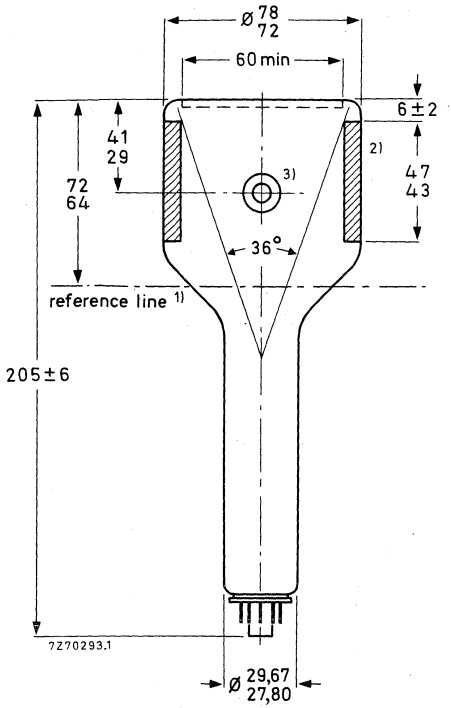

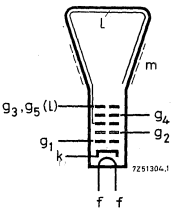

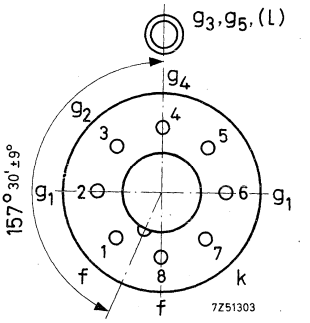

Mounting position : any, except with the screen downwards and the axis of the tube at an angle of less than 20° to vertical.

Base : Neo eightar, B8-H ; IEC67-I-31a

Net mass : ≈ 180 g

---

1) Reference line determined by the plane of the upper edge of the reference line gauge when the gauge is resting on the cone.

2) The outer conductive coating must be earthed.

3) Recessed cavity contact CT8 ; IEC67-III-2

REFERENCE LINE GAUGE

IEC67-IV-3, JEDEC 126

TYPICAL OPERATION

Final accelerator voltage	$V_{g3, g5, \ell}$		16	kV	
Focusing electrode voltage	V_{g4}	0 to	600	V	1)
First accelerator voltage	V_{g2}		600	V	
Grid no. 1 voltage for visual extinction of a focused raster	V_{g1}	−32 to	−85	V	

RESOLUTION

Resolution at screen centre, measured with the shrinking raster method, non-interlaced raster, under typical operating conditions, a beam current of 50 μA, focusing voltage adjusted for optimum spot size 400 lines

1) To obtain optimum focus at the centre of the screen with a beam current of 50 μA. If it is required to pass through the point of focus, a voltage range of -100 V to +700V may be required.

LIMITING VALUES (Absolute max. rating system)

Final accelerator voltage	$V_{g3,\,g5,\ell}$	max.	18	kV	1)
		min.	12	kV	
Focusing electrode voltage	V_{g4}	max.	1	kV	
		min.	0,5	kV	
First accelerator voltage	V_{g2}	max.	800	V	
		min.	300	V	
Cathode to heater voltage, positive	V_{kf}	max.	250	V	2)
positive peak	V_{kf_p}	max.	300	V	
negative	$-V_{kf}$	max.	135	V	
negative peak	$-V_{kf_p}$	max.	180	V	

WARNING

X-ray shielding is advisable to give protection against possible danger of personal injury arising from prolonged exposure at close range to this tube.

1) These voltages are only permissible when use is made of the insulating cap, provided with the tube. This cap should be inserted between tube and deflection coil. Without cap $V_{g3,\,g5,\ell}$ is max. 13 kV.

2) During a warm-up period not exceeding 15 s the heater may be 410 V negative with respect to the cathode.

FLYING SPOT SCANNER TUBE

The Q13-110.. is a 13 cm diameter cathode-ray tube intended for flying spot applications.

QUICK REFERENCE DATA		
Accelerator voltage	25	kV
Deflection angle	40°	
Resolution	1000	lines

SCREEN

Metal backed

	Colour	Persistence
Q13-110BA	Purplish blue	Very short
Q13-110GU	White	Very short

Useful screen diameter min. 108 mm

HEATING

Indirect by A.C. or D.C.; series or parallel supply

Heater voltage	V_f	6.3	V
Heater current	I_f	300	mA

CAPACITANCES

Grid No.1 to all other electrodes	C_{g1}	6.5	pF
Cathode to all other electrodes	C_k	6.5	pF
Accelerator to outer conductive coating	$C_{g2(\ell)/m}$	250 to 450	pF

MECHANICAL DATA

Dimensions in mm

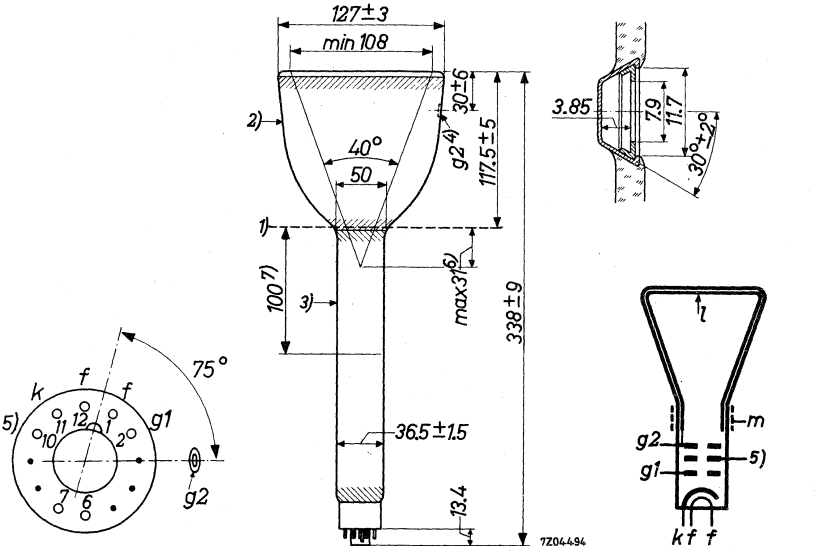

Mounting position: any, except with screen downwards and the axis of the tube making an angle of less than 50° with the vertical.

Base — Duodecal 7p.

---

1) Reference line, determined by the plane of the upper edge of the reference line gauge when the gauge is resting on the cone.

2) Insulating outer coating; should not be in close proximity to any metal part.

3) Conductive outer coating; to be grounded.

4) Recessed cavity contact.

5) Spark trap; to be grounded.

6) The distance between the deflection centre and the reference line should not exceed 31 mm.

7) Distance between the centre of the magnetic length of the focusing unit and the reference line.

FOCUSING magnetic

DEFLECTION magnetic

REFERENCE LINE GAUGE

Dimensions in mmm

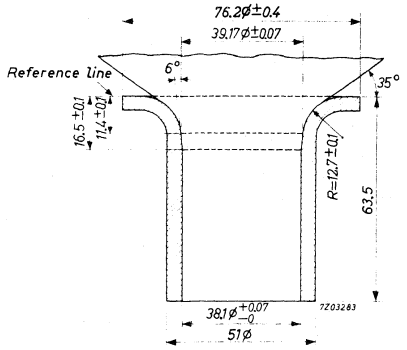

OPERATING CHARACTERISTICS

Accelerator voltage	$V_{g2(\ell)}$	25	kV
Beam current	I_ℓ	50 to 150	μA
Negative grid No. 1 cut-off voltage	$-V_{g1}(I_\ell = 0)$	50 to 100	V

Resolution at centre of screen better than 1000 lines

LIMITING VALUES (Absolute max. rating system)

Accelerator voltage	$V_{g_2(\ell)}$	max.	27	kV
		min.	20	kV
Grid No.1 voltage,				
negative value	$-V_{g_1}$	max.	200	V
positive value	$+V_{g_1}$	max.	0	V
peak positive value	$+V_{g_{1p}}$	max.	2	V
Cathode current	I_k	max.	150	μA
Voltage between heater and cathode [1]				
cathode negative	V_{kf} (k neg.)	max.	125	V
cathode positive	V_{kf} (k pos.)	max.	200	V
peak value, cathode positive	V_{kf_p}(k pos.)	max.	410	V [2]
External resistance between heater and cathode	R_{kf}	max.	1	MΩ
External grid No.1 resistance	R_{g_1}	max.	1.5	MΩ
External grid No.1 impedance at a frequency of 50 Hz	Z_{g_1} (f = 50 Hz)	max.	0.5	MΩ

REMARKS

Measures should be taken for the beam current to be switched off immediately when one of the time-base circuits becomes defective.

An X-ray radiation shielding with an equivalent lead thickness of 0.5 mm is required to protect the observer.

1) In order to avoid excessive hum, the A.C. component of the heater to cathode voltage should be as low as possible and should not exceed 20 V_{RMS}.

2) During a heating-up period not exceeding 45 sec.

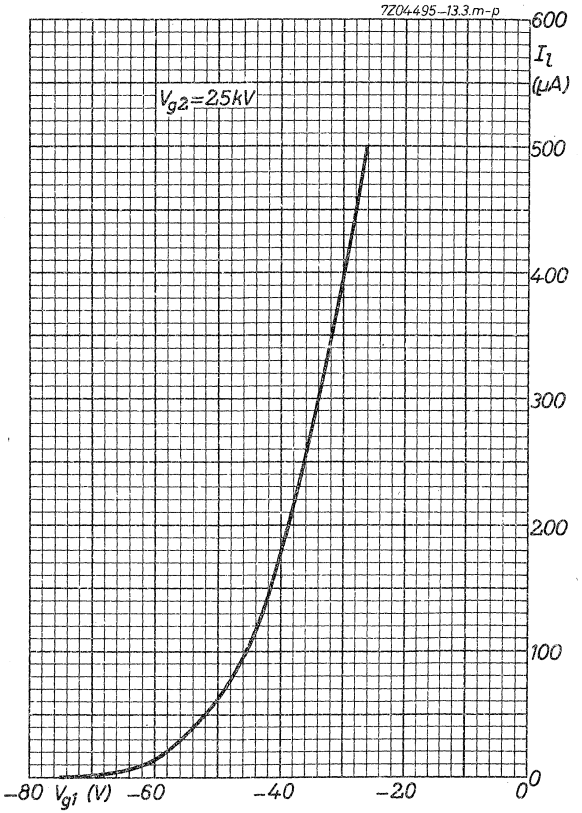
7Z04495-13.3.m-p
600
I_l
(μA)
500
400
300
200
100
0
V_{g2}=2.5kV
-80 V_{gi} (V) -60
-40
-20
0

ASSOCIATED ACCESSORIES

DEFLECTION UNIT

QUICK REFERENCE DATA

Monitor tube	31 cm (12 in), 38 cm (15 in)
diagonal	28 mm
neck diameter	110°
Deflection angle	4,4 A (p-p)
Line deflection current, edge to edge at 17 kV	690 μH
Inductance of line coils, parallel connected	1,08 A (p-p)
Field deflection current, edge to edge at 17 kV	7,6 Ω
Resistance of field coils, parallel connected	

APPLICATION

This deflection unit has been designed for use with 31 cm (12 in) and 38 cm (15 in) 110° monochrome monitor tubes in conjunction with:

- line output transformer AT2102/04;
- linearity control unit AT4042/08;
- line driver transformer AT4043/59.

DESCRIPTION

The saddle-shaped line deflection coils are moulded so that the deflection centre is well within the conical part of the monitor tube. The field deflection coils are wound on a Ferroxcube yoke ring which is flared so that the field and line deflection centres coincide. Provisions are made for centring, and correction of pin-cushion distortion. The unit meets the self-extinguishing and non-dripping requirements of IEC 65.

MOUNTING

The unit should be mounted as far forward as possible on the neck of the monitor tube, so that it touches the cone.

To orient the raster correctly, the unit may be rotated by hand on the neck of the monitor tube, with which it makes a slip fit. A screw-tightened clamping ring permits it to be locked, both axially and radially, in the desired position.

MECHANICAL DATA

Dimensions in mm

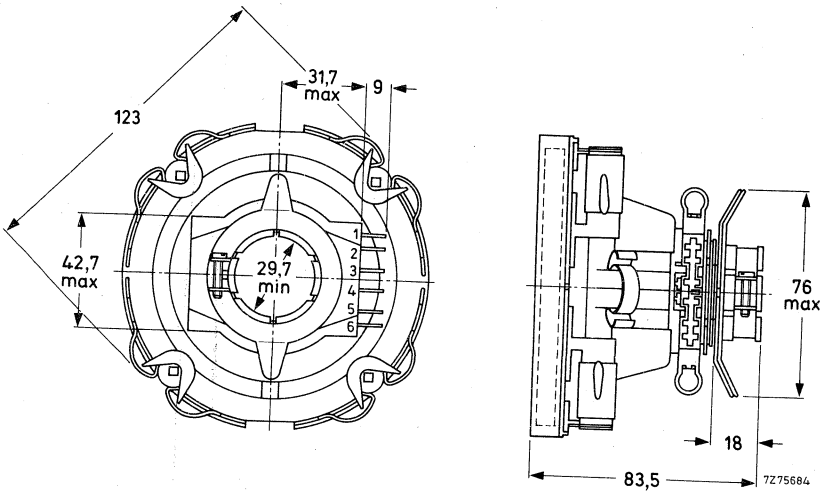

Fig. 1 Deflection unit AT1038/40.

ELECTRICAL DATA

The electrical values apply at an ambient temperature of 25 °C.

Line deflection coils, parallel connected (Fig. 2a); terminals 3 and 4	
Inductance	690 μH ± 4,5%
Resistance	1,1 Ω ± 8%
Field deflection coils, parallel or series connected (Fig. 2b); terminals 1 and 2 for parallel connected coils (terminals 1 and 6, and 2 and 5 to be interconnected); terminals 2 and 6 for series connected coils (terminals 1 and 5 to be interconnected)	
Inductance (parallel connected coils)	14,1 mH ± 8%
Inductance (series connected coils)	56,4 mH ± 8%
Resistance (parallel connected coils)	7,6 Ω ± 8%
Resistance (series connected coils)	30,4 Ω ± 8%
Maximum d.c. voltage between line and field coils	2500 V
Maximum operating temperature	95 °C

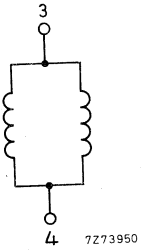

Fig. 2a Line coils.

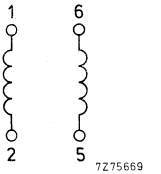

Fig. 2b Field coils.

The following characteristics are measured at an e.h.t. of 17 kV on a 38 cm (15 in) reference tube.

Sensitivity

Deflection current edge to edge	
in line direction	4,4 A (p-p)
in field direction	1,08 A (p-p)

Geometric distortion measured without correction magnets on a 38 cm (15 in) reference tube.

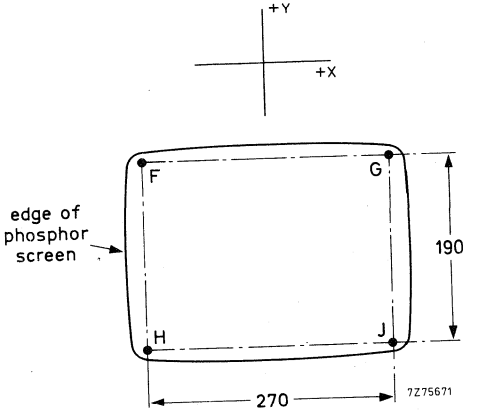

Fig. 3.

Fy	: +4	$^{+2}_{-2}$	Fx	: −4	$^{-2}_{+2}$
Gy	: +4	$^{+2}_{-2}$	Gx	: +4	$^{+2}_{-2}$
Jy	: +4	$^{-2}_{+2}$	Jx	: +4	$^{+2}_{-2}$
Hy	: +4	$^{-2}_{+2}$	Hx	: −4	$^{-2}_{+2}$

CORRECTION FACILITIES

For centring

After adjustment of the linearity of the deflection current, the eccentricity of the monitor tube and the deflection unit can be corrected by means of two independently movable centring magnets of plastic-bonded Ferroxdure. These magnets are magnetized diametrically. By turning the magnets with respect to each other the resulting field strength is varied. The direction of the resulting magnetic field is adjusted by turning the magnets simultaneously.

These centring magnets cannot be used for compensating the effects of non-linearity or of phase differences between the synchronization and time base, as otherwise the correction needed becomes excessive. Even if the correction is within the range of the magnets, curved lines may appear in the centre of the raster.

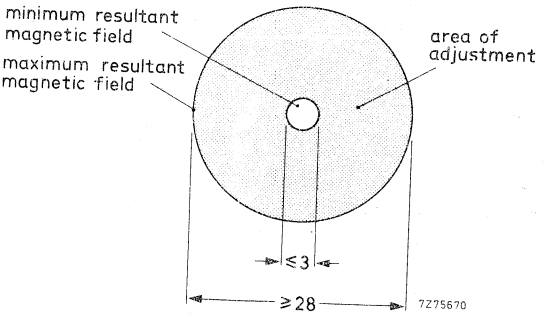

Fig. 4.

For pin-cushion distortion

Pin-cushion distortion can be corrected by four Ferroxdure magnets with pole-shoe brackets, which have been mounted on the deflection unit. Limited correction of asymmetrical pin-cushion distortion can be achieved by unequal movement of these magnets. The field strength can be adjusted by rotation of these magnets.

DEFLECTION UNIT

QUICK REFERENCE DATA

Monitor tube	
diagonal	24 cm (9 in), 31 cm (12 in)
neck diameter	20 mm*, 28 mm
Deflection angle	90°
Line deflection current, edge to edge at 16 kV	9,3 A (p-p)
Inductance of line coils, parallel connected	93 μH
Field deflection current, edge to edge at 16 kV	0,91 A (p-p)
Resistance of field coils, parallel connected	6,75 Ω

APPLICATION

This deflection unit has been designed for use with 24 cm (9 in) or 31 cm (12 in) 90° monochrome monitor tubes in conjunction with:

line output transformer AT2102/02;
linearity control unit AT4036;
line driver transformer AT4043/56.

DESCRIPTION

The saddle-shaped line deflection coils are moulded so that the deflection centre is well within the conical part of the monitor tube. The field deflection coils are wound on a Ferroxcube yoke ring which is flared so that the frame and line deflection centres coincide. Provisions are made for centring, and correction of pin-cushion distortion. The unit meets the self-extinguishing and non-dripping requirements of IEC 65.

MOUNTING

The unit should be mounted as far forward as possible on the neck of the monitor tube, so that it touches the cone.

To orient the raster correctly, the unit may be rotated by hand on the neck of the monitor tube, with which it makes a slip fit. A screw-tightened clamping ring permits it to be locked, both axially and radially, in the desired position.

Note: Use of the deflection unit with a monitor tube with a neck diameter of 20 mm requires the use of a packing piece, catalogue number 3122 134 07820.

* Packing piece required, see Mounting.

MECHANICAL DATA

Dimensions in mm

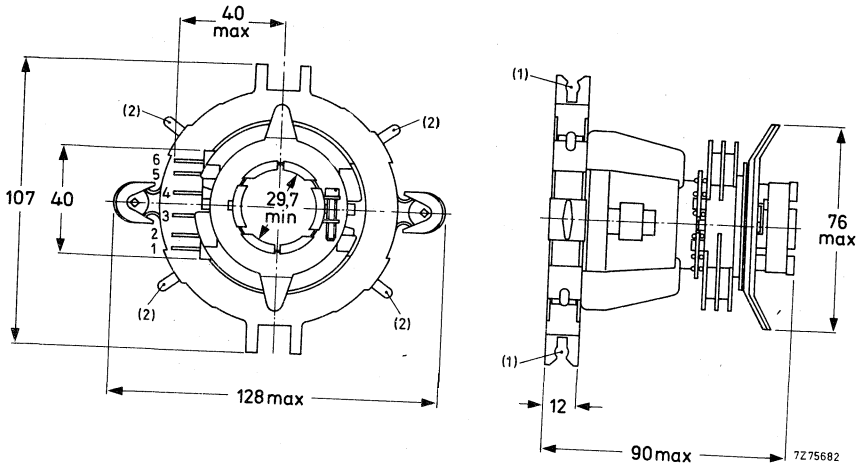

Fig. 1 Deflection unit AT1071/03. Facilities for fitting correction magnets:
(1) for plastic-bonded FXD magnet rods, catalogue number 3122 104 90360;
(2) for plastic-bonded FXD magnets, catalogue number 3122 104 94120.

The unit is provided with solder pins for connection. The pin numbering in Fig. 1 corresponds to that in the connection diagram (Figs 2a and 2b).

ELECTRICAL DATA

Line deflection coils, parallel connected (Fig. 2a); terminals 3 and 4	
Inductance	93 μH
Resistance	0,15 Ω
Field deflection coils, parallel or series connected (Fig. 2b); terminals 1 and 2 for parallel connected coils (terminals 1 and 6, and 2 and 5 to be interconnected); terminals 2 and 6 for series connected coils (terminals 1 and 5 to be interconnected)	
Inductance (parallel connected coils)	14 mH
Inductance (series connected coils)	56 mH
Resistance (parallel connected coils)	6,75 Ω
Resistance (series connected coils)	27 Ω
Maximum d.c. voltage between terminals of line and field coils	2000 V
Maximum operating temperature	95 °C

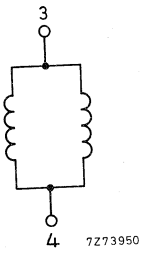

Fig. 2a Line coils.

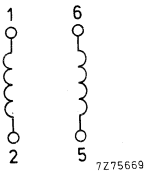

Fig. 2b Field coils.

The following characteristics are measured at an e.h.t. of 16 kV on a 24 cm (9 in) reference tube.

Sensitivity

Deflection current edge to edge	
in line direction	9,3 A (p-p)
in field direction	0,91 A (p-p)

Geometric distortion measured without correction magnets on a 24 cm (9 in) reference tube.

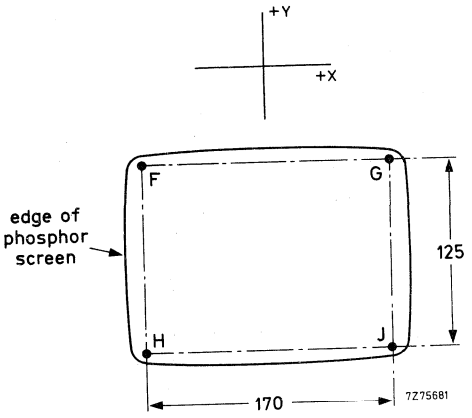

Fig. 3.

Fy	: +1,75	$^{+1,25}_{-1,25}$	Fx	: −1,25	$^{-1,25}_{+1,25}$
Gy	: +1,75	$^{+1,25}_{-1,25}$	Gx	: +1,25	$^{+1,25}_{-1,25}$
Jy	: −1,75	$^{-1,25}_{+1,25}$	Jx	: +1,25	$^{+1,25}_{-1,25}$
Hy	: −1,75	$^{-1,25}_{+1,25}$	Hx	: −1,25	$^{-1,25}_{+1,25}$

CORRECTION FACILITIES

For centring

After adjustment of the linearity of the deflection current, the eccentricity of the monitor tube and the deflection unit can be corrected by means of two independently movable centring magnets of plastic-bonded Ferroxdure. These magnets are magnetized diametrically. By turning the magnets with respect to each other the resulting field strength is varied. The direction of the resulting magnetic field is adjusted by turning the magnets simultaneously.

These centring magnets cannot be used for compensating the effects of non-linearity or of phase differences between the synchronization and time base, as otherwise the correction needed becomes excessive. Even if the correction is within the range of the magnets, curved lines may appear in the centre of the raster.

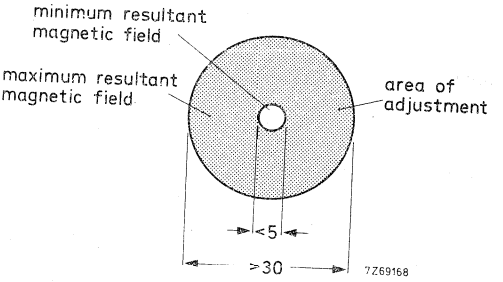

Fig. 4.

For pin-cushion distortion

Pin-cushion distortion can be corrected by two Ferroxdure magnets with pole-shoe brackets, which have been mounted on the deflection unit. Limited correction of asymmetrical pin-cushion distortion can be achieved by unequal movement of these magnets. The field strength can be adjusted by rotation of these magnets. To correct the top and bottom of the raster, two plastic-bonded Ferroxdure magnet rods* can be fitted (Fig. 1). To correct the corners of the raster, four plastic-bonded Ferroxdure magnets** (Fig. 1) can be fitted.

* Available under catalogue number 3122 104 90360.
** Available under catalogue number 3122 104 94120.

DEFLECTION UNIT

QUICK REFERENCE DATA

Monitor tube	17 cm (7 in)
diagonal	28 mm
neck diameter	
Deflection angle	70°
Line deflection current, edge to edge at 16 kV	6,7 A (p-p)
Inductance of line coils, parallel connected	87 μH
Field deflection current, edge to edge at 16 kV	0,84 A (p-p)
Resistance of field coils, parallel connected	4,2 Ω

APPLICATION

This deflection unit has been designed for use with 17 cm (7 in) 70° monochrome monitor tubes in conjunction with:

line output transformer AT2102/02;
linearity control unit AT4036;
line driver transformer AT4043/56.

DESCRIPTION

The saddle-shaped line deflection coils are moulded so that the deflection centre is well within the conical part of the monitor tube. The field deflection coils are wound on a Ferroxcube yoke ring which is flared so that the frame and line deflection centres coincide. Provisions are made for centring, and correction of pin-cushion distortion. The unit meets the self-extinguishing and non-dripping requirements of IEC 65.

MOUNTING

The unit should be mounted as far forward as possible on the neck of the monitor tube, so that it touches the cone.

To orient the raster correctly, the unit may be rotated by hand on the neck of the monitor tube, with which it makes a slip fit. A screw-tightened clamping ring permits it to be locked, both axially and radially, in the desired position.

MECHANICAL DATA

Dimensions in mm

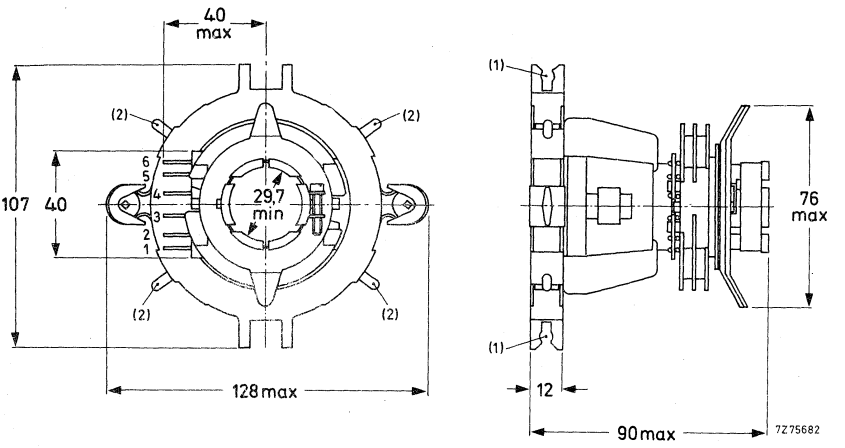

Fig. 1 Deflection unit AT1071/07. Facilities for fitting correction magnets:
(1) for plastic-bonded FXD magnet rods catalogue number 3122 104 90360;
(2) for plastic-bonded FXD magnets, catalogue number 3122 104 94120.

The unit is provided with solder pins for connection. The pin numbering in Fig. 1 corresponds to that in the connection diagram (Figs 2a and 2b).

ELECTRICAL DATA

Line deflection coils, parallel connected (Fig. 2a); terminals 3 and 4	
Inductance	87 μH
Resistance	0,14 Ω
Field deflection coils, parallel or series connected (Fig. 2b); terminals 1 and 2 for parallel connected coils (terminals 1 and 6, and 2 and 5 to be interconnected); terminals 2 and 6 for series connected coils (terminals 1 and 5 to be interconnected)	
Inductance (parallel connected coils)	10,4 mH
Inductance (series connected coils)	41,6 mH
Resistance (parallel connected coils)	4,2 Ω
Resistance (series connected coils)	16,8 Ω
Maximum d.c. voltage between terminals of line and field coils	2000 V
Maximum operating temperature	95 °C

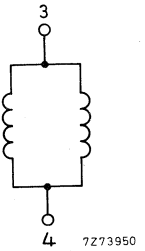

Fig. 2a Line coils.

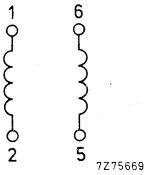

Fig. 2b Field coils.

The following characteristics are measured at an e.h.t. of 16 kV on a 17 cm (7 in) 70° reference tube.

Sensitivity

Deflection current edge to edge	
in line direction	6,7 A (p-p)
in field direction	0,84 A (p-p)

Geometric distortion measured without correction magnets on a 17 cm (7 in) 70° reference tube.

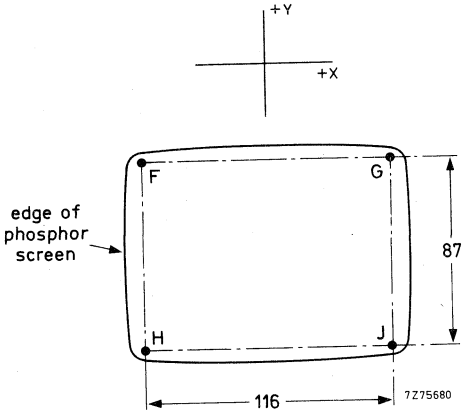

Fig. 3.

Fy	: +0,75	$^{+2}_{-2}$	Fx	: +0,5	$^{+1,5}_{-1,5}$
Gy	: +0,75	$^{+2}_{-2}$	Gx	: −0,5	$^{-1,5}_{+1,5}$
Jy	: −0,75	$^{-2}_{+2}$	Jx	: −0,5	$^{-1,5}_{+1,5}$
Hy	: −0,75	$^{-2}_{+2}$	Hx	: +0,5	$^{+1,5}_{-1,5}$

CORRECTION FACILITIES

For centring

After adjustment of the linearity of the deflection current, the eccentricity of the monitor tube and the deflection unit can be corrected by means of two independently movable centring magnets of plastic-bonded Ferroxdure. These magnets are magnetized diametrically. By turning the magnets with respect to each other the resulting field strength is varied. The direction of the resulting magnetic field is adjusted by turning the magnets simultaneously.

These centring magnets cannot be used for compensating the effects of non-linearity or of phase differences between the synchronization and time base, as otherwise the correction needed becomes excessive. Even if the correction is within the range of the magnets, curved lines may appear in the centre of the raster.

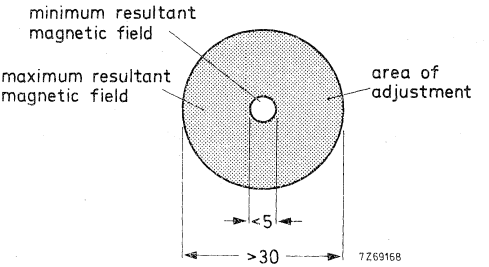

Fig. 4.

For pin-cushion distortion

Pin-cushion distortion can be corrected by two Ferroxdure magnets with pole-shoe brackets, which have been mounted on the deflection unit. Limited correction of asymmetrical pin-cushion distortion can be achieved by unequal movement of these magnets. The field strength can be adjusted by rotation of these magnets. To correct the top and bottom of the raster, two plastic-bonded Ferroxdure magnet rods* can be fitted (Fig. 1). To correct the corners of the raster, four plastic-bonded Ferroxdure magnets** (Fig. 1) can be fitted.

* Available under catalogue number 3122 104 90360.
** Available under catalogue number 3122 104 94120.

TUBE SOCKET

FOR 14-PIN ALL GLASS BASES

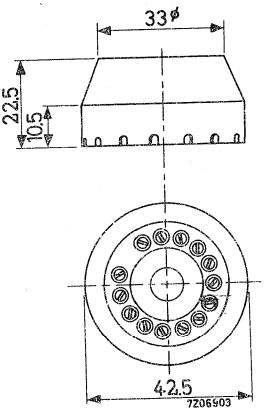

Material: Synthetic resin insulating material

14 silver plated fork-shaped contacts

MU-METAL SCREEN

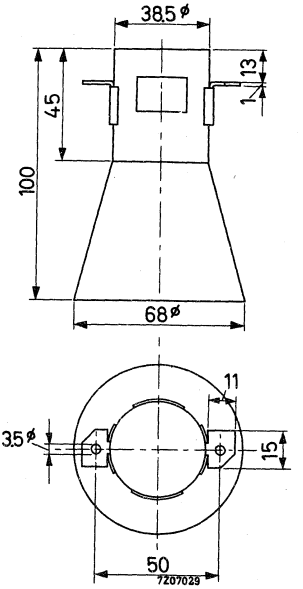

MU-METAL SCREEN

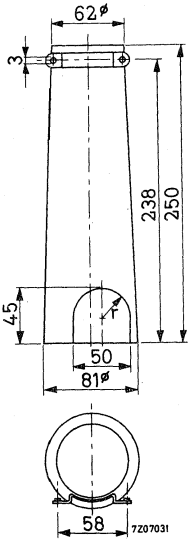

MU-METAL SCREEN

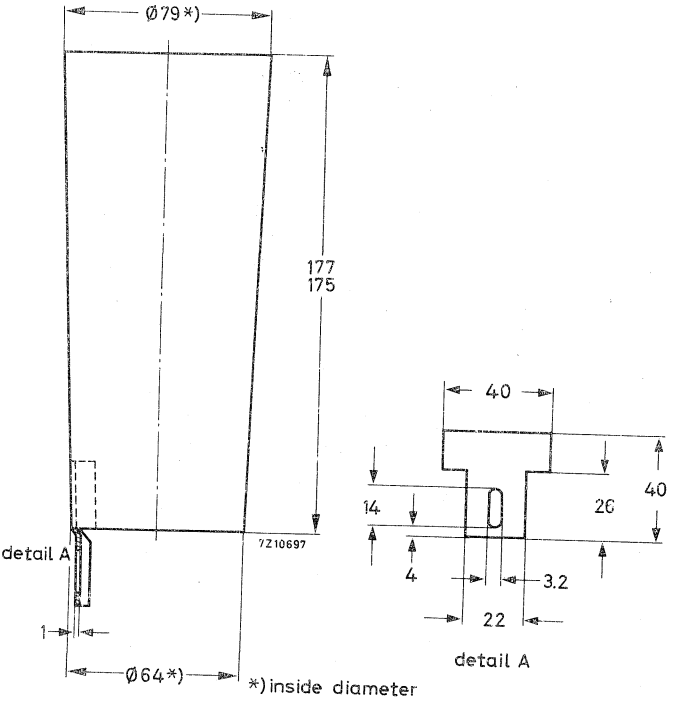

Material: Mu-metal 0,35 mm thick

MU-METAL SCREEN

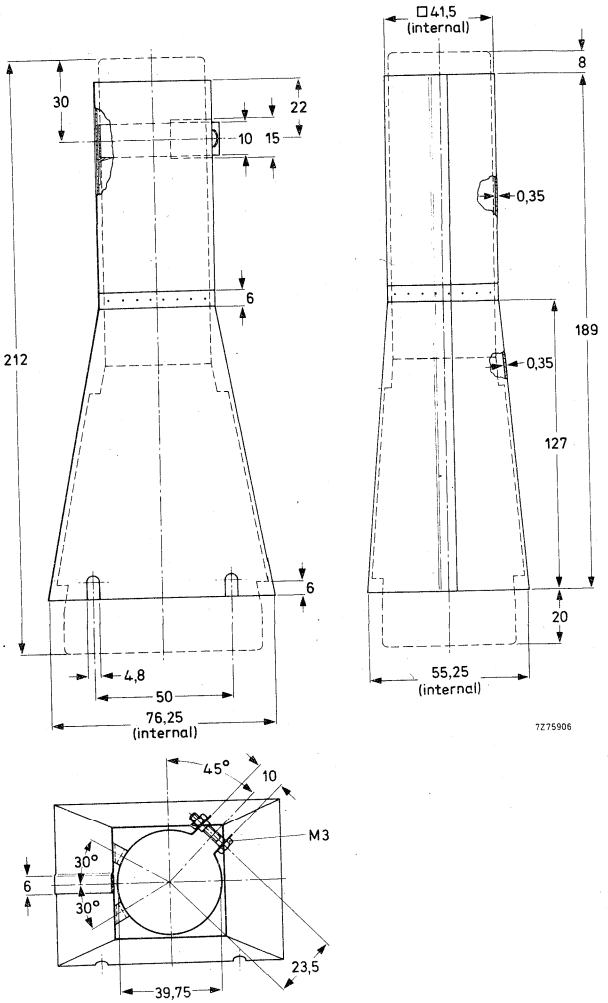

MU-METAL SCREEN

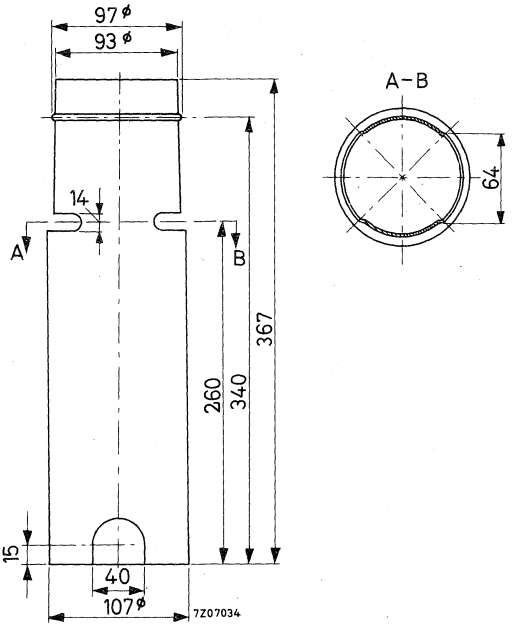

Material : Mu-metal

MU–METAL SCREEN

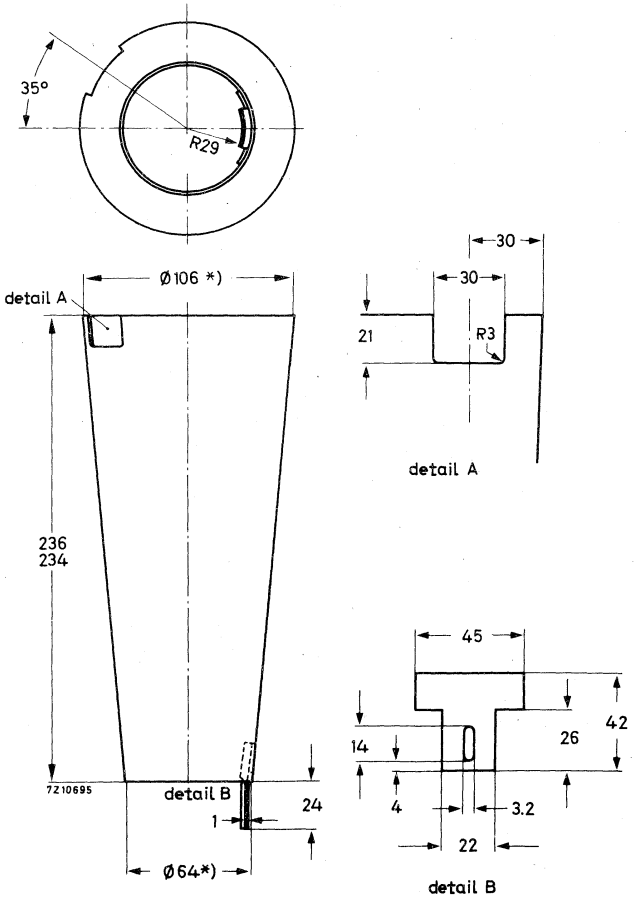

Material: Mu-metal, 0.35 mm thick

MU-METAL SCREEN

Type 55548A without mounting bracket
Type 55548 with mounting bracket

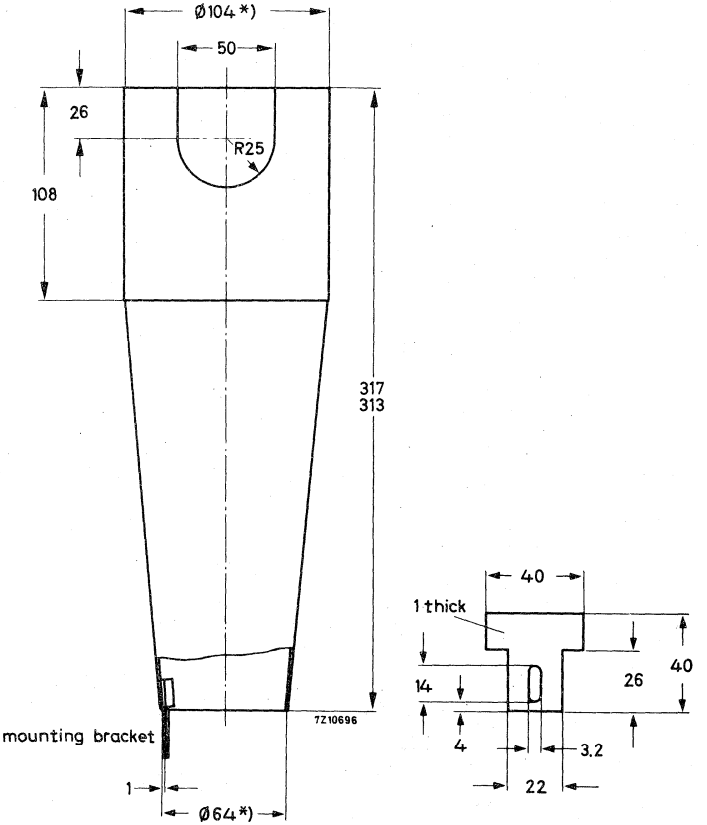

*) inside diameter

Material: Mu-metal, 0.5 mm thick

MU-METAL SCREEN

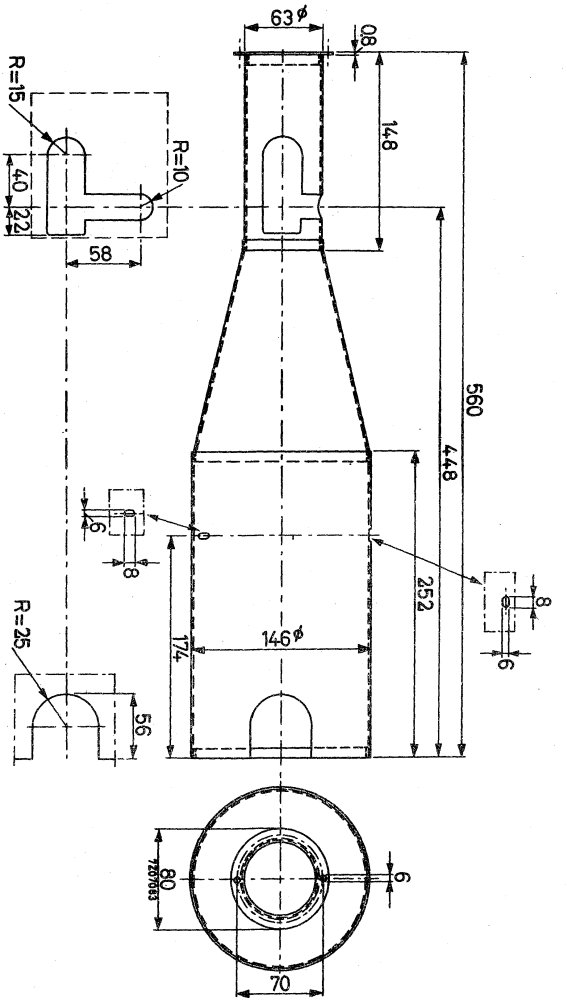

MU-METAL SCREEN

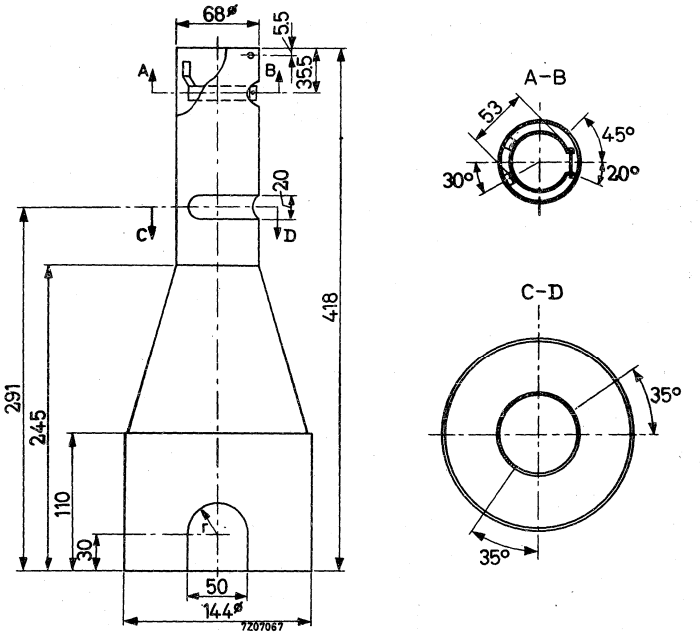

MU-METAL SCREEN

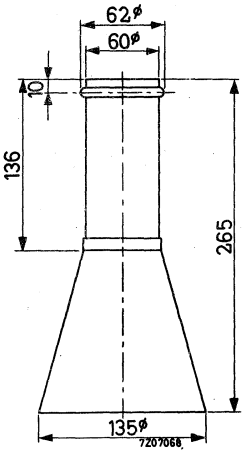

FINAL ACCELERATOR CONTACT CONNECTOR

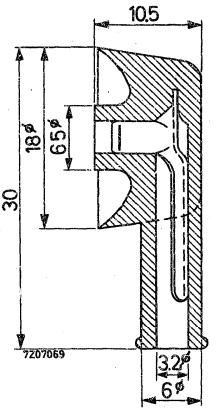

Material: cadmium plated spring contact
rubber insulating material

SIDE CONTACT CONNECTOR

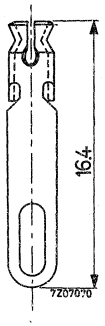

FINAL ACCELERATOR CONTACT CONNECTOR

Type 55563A supersedes type 55563.

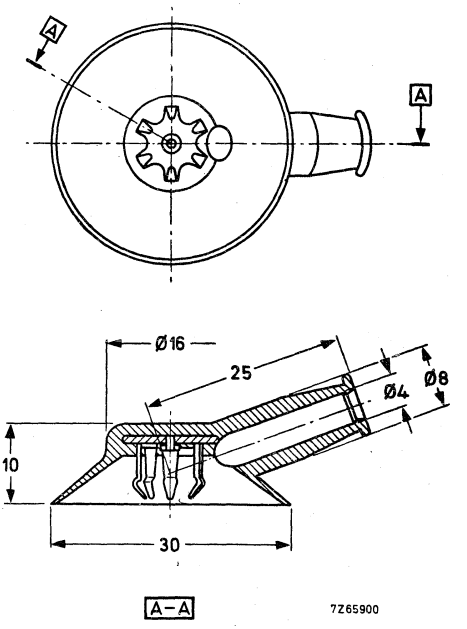

TUBE SOCKET FOR 14-PIN BASES

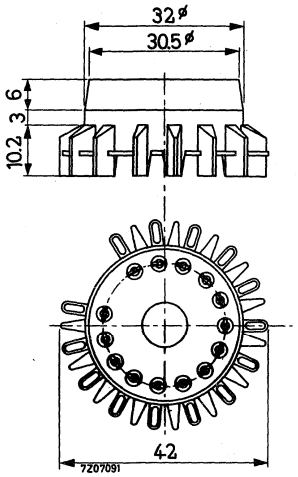

Material: synthetic resin insulating material

14 gold plated fork shaped contacts

MU-METAL SCREEN

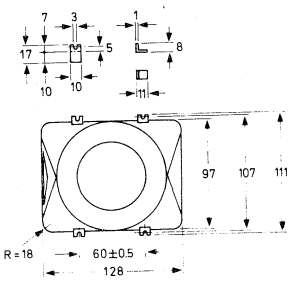

* inside diameter

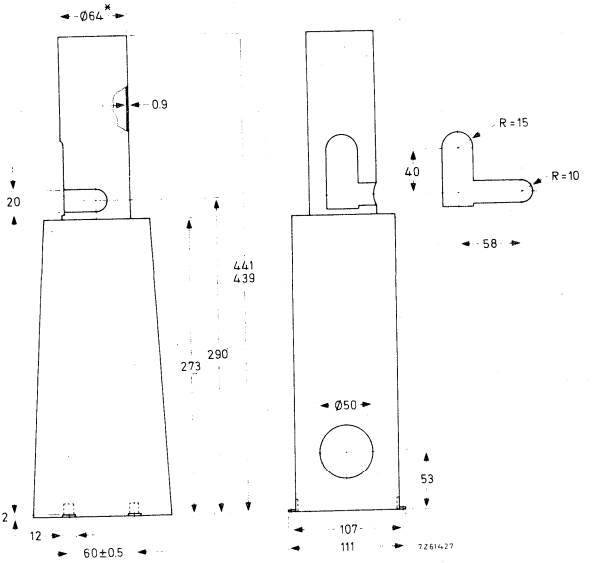

FINAL ACCELERATOR CONTACT CONNECTOR

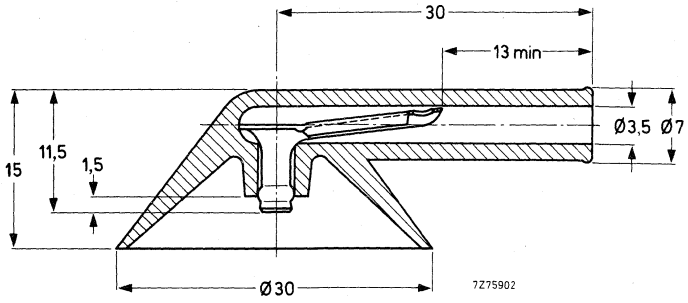

Insulating material: silicon rubber.

TUBE SOCKET

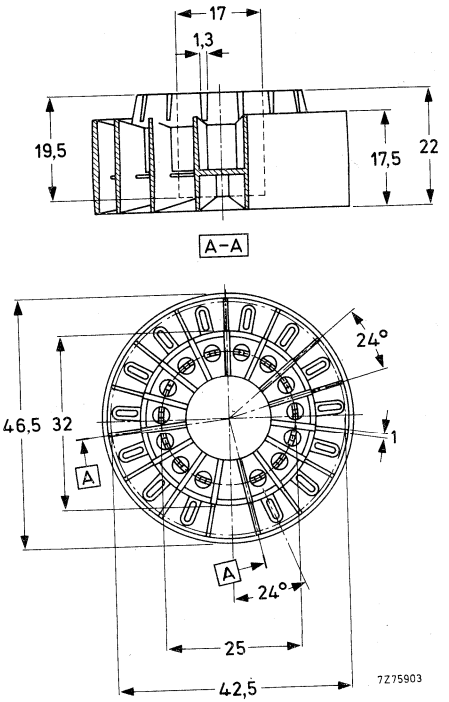

MU-METAL SCREEN

Type 55580A with 4 mounting lugs L
Type 55580 without mounting lugs L

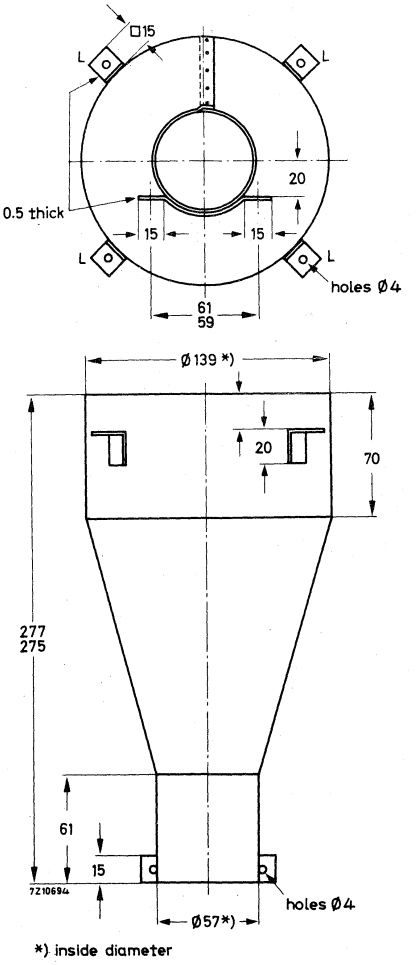

Material: Mu-metal, 0.35 mm thick

MU-METAL SCREEN

Type 55581A with hole H

Type 55581 without hole H

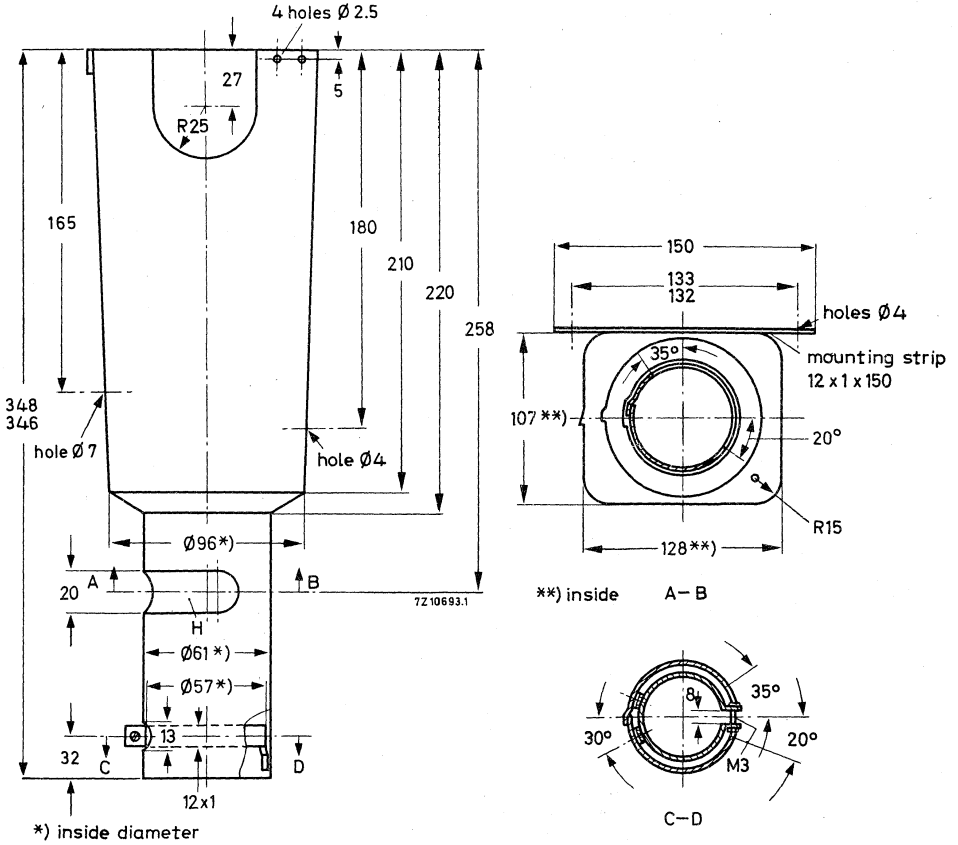

Material: Mu-metal, 0,5 mm thick.

MU-METAL SCREEN

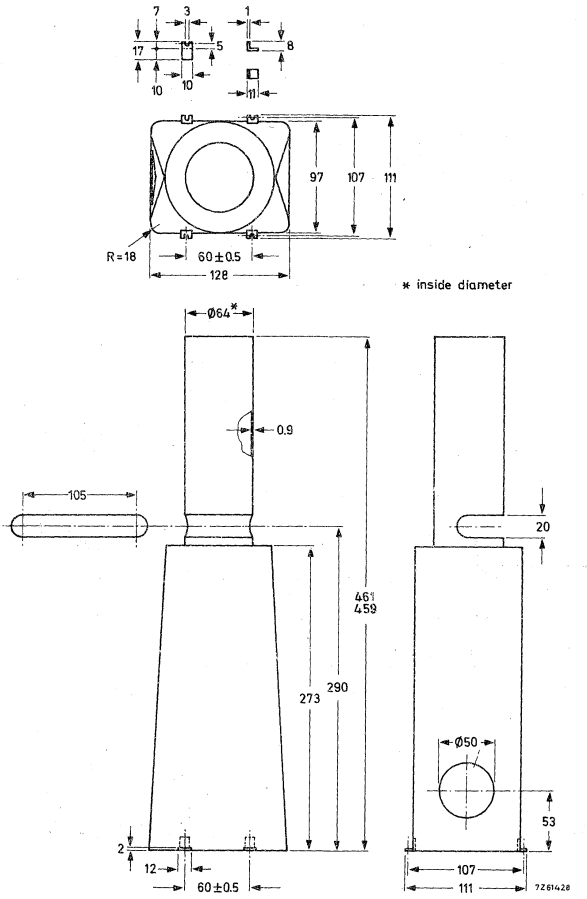

MU-METAL SCREEN

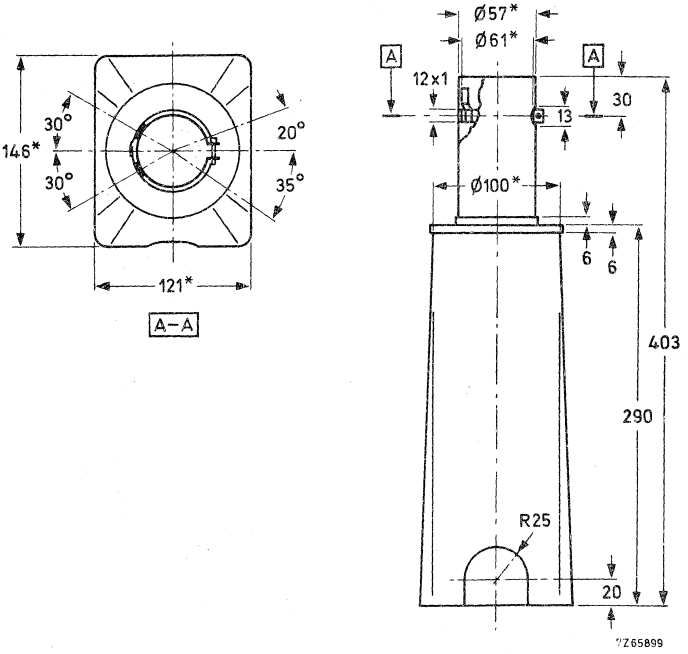

* Internal dimension

MU-METAL SCREEN

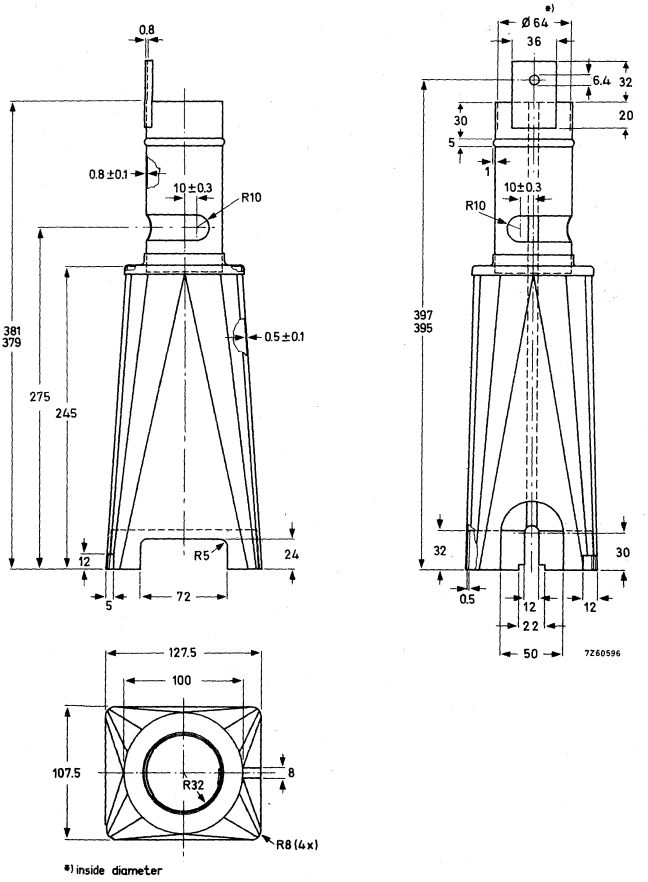

MU-METAL SCREEN

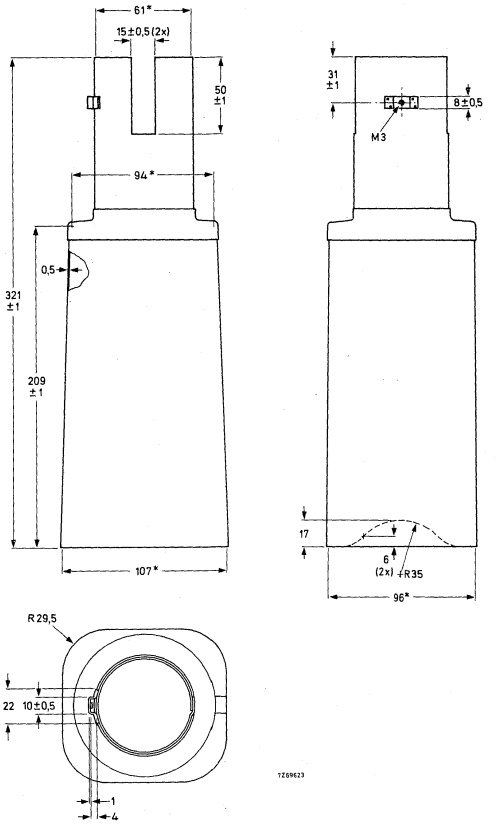

*Internal dimension

TUBE SOCKET

- For 12-pin all glass base

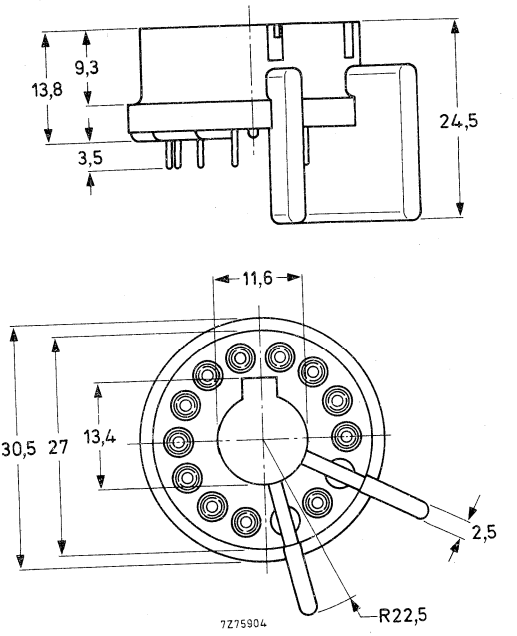

BEAM CENTRING MAGNET

INSTRUCTIONS FOR USE

To obtain the best performance from an electrostatically focussed tube, it is important that the axis of the beam should coincide with that of the lens. In practice this is not always so because of small errors in geometry. By means of this magnet it is possible to adjust, if necessary, the position of the beam and so produce a true alignment in every case. The effect is illustrated in Figs 1a and 1b which show enlarged views of a single element in a spot raster under the special operating conditions given in the directions for setting. With a well aligned beam, an image such as that in Fig. 1a can be seen. Very small errors will produce a spot as shown in Fig. 1b where the brightest part of the image does not appear in the centre of the diffused area or haze. In such a case, the picture quality would be good but with only a small adjustment of the beam, so that the brightest part becomes central, a noticeable improvement can be made.

The unit has a non-magnetic ring containing a diametrically magnetized Ferroxdure core and two soft-iron pole pieces covered with plastic material to protect the glass surface.

730723-23-02

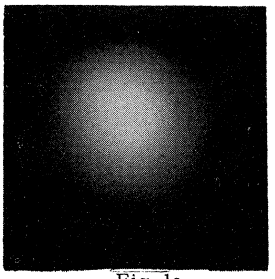

Fig. 1a

730723-23-01

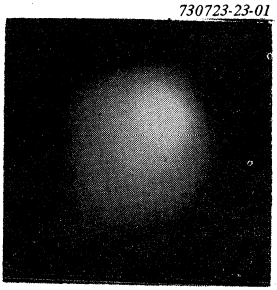

Fig. 1b

The field strength can be altered by turning the core as indicated in Fig. 2, and the direction by turning the whole unit. Moving the unit along the neck of the tube will cause a small change in the position of the beam but it is most effective at about 20 mm from the cap (Fig. 3).

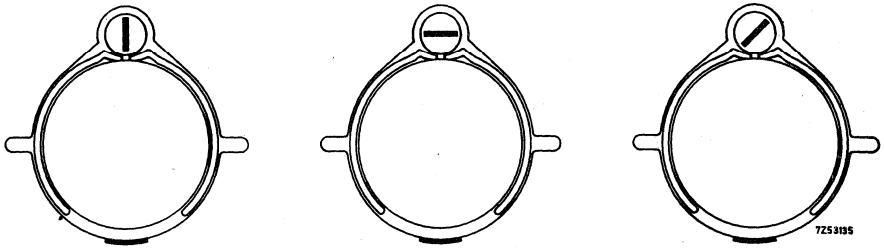

a) minimum b) maximum c) intermediate

Fig. 2

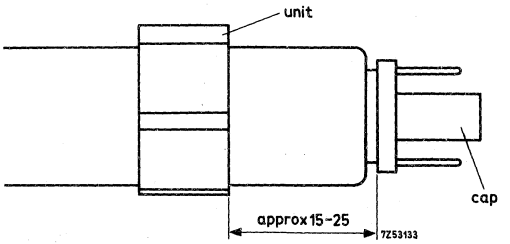

Fig.3

SETTING

This can best be done with a spot raster on the screen, and by observing one of the elements near the centre. A suitable raster would have, for instance, a spot duration of 1/6 µs with a repetition time of 6 µs and an image as in Fig. 1 can then be produced with the following conditions.

V_f	=	6.3 V	or other conditions if required
*V^{g1}	=	0	
V^{g2}	=	600 V	
$V^{g3, g5(1)}$	=	16 kV	
V_{g4}	=	−300 to −500 V	

*) To avoid burning the screen, adjust slowly from -50 V to zero

Set the unit on the neck at about 20 mm from the cap and turn it until the brightest part of the image appears central in the haze.

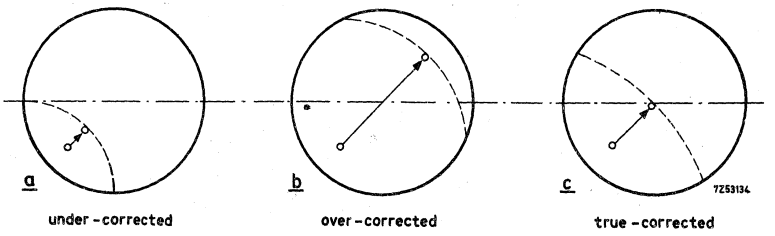

Fig.4

The diagrams in Fig. 4 show the process of adjusting the brightest part from its original position to the centre. The distance between the two points will be determined by the field strength, and the position of the new point along the dotted line will depend on the direction of the field.
If the magnet is under or over-correcting as in (Figs 4a and 4b), the field strength must be changed. To do this, remove the unit from the neck, push the core out sufficiently to get a finger grip and turn it towards maximum or minimum Figs 2a and 2b as required. Return it to the stop in the clamp and set the unit once again on the neck.

If the means of producing a spot raster are not available, a test pattern or suitable picture can be used when setting. It is not easy with this method, however, to assess the degree of change needed in field strength or direction but if a start is made with the line on the core set at about 20° from the minimum position in Fig. 2, an improvement can be made in most cases where it is required. In others, it may be necessary to try one or two further core settings, but with a little experience it is not difficult to find an arrangement which gives the best vertical and horizontal resolution.

The unit should be sufficiently tight on the neck to prevent movement during transit but if, for some reason, this does not appear to be so, the bends on the ring should be compressed slightly.

INDEX
MAINTENANCE TYPE LIST
OBSOLESCENT TYPE LIST

INDEX OF TYPE NUMBERS

type number	section
D7–190..	I.T.
D7–191..	I.T.
D7–220GH	I.T.
D7–221GH	I.T.
D10–160..	I.T.
D10-161..	I.T.
D10–170..	I.T.
D13–26..	I.T.
D13–26../01	I.T.
D13–27..	I.T.
D13–451../45	I.T.
D13–480..	I.T.
D13–481..	I.T.
D13–500GH/01	I.T.
D14–120GH	I.T.
D14–121GH	I.T.
D14–122GH	I.T.
D14–123GH	I.T.
D14–162GH/09	I.T.
D14–240GH/09	I.T.
D14–240GH/37	I.T.
D14–250GH	I.T.
D14–251GH	I.T.
D14–260GH	I.T.
D14–261GH	I.T.
D14–290GH	I.T.
D18–120..	I.T.
DG7–5	I.T.
DG7–6	I.T.
DG7–31	I.T.

type number	section
DG7–32	I.T.
DH3–91	I.T.
D . 7–11	I.T.
E10–12..	I.T.
E10–130..	I.T.
E14–100GH	I.T.
E14–101GH	I.T.
L14–110GH/55	I.T.
L14–111GH/55	I.T.
L14–130GH/55	I.T.
L14–131GH/55	I.T.
M17–140W	M
M17–141W	M
M24–100W	M
M24–101W	M
M31–130W	M
M31–131W	M
M38–120W	M
M38–121W	M
MG/U/Y13–38	S.C.T.
MW13–38	S.C.T.
Q7–100GU	S.C.T.
Q13–110	S.C.T.
AT1038/40	Acc.
AT1071/03	Acc.
AT1071/07	Acc.
40467	Acc.
55530	Acc.
55532	Acc.
55534	Acc.

type number	section
55535	Acc.
55545	Acc.
55547	Acc.
55548	Acc.
55548/A	Acc.
55554	Acc.
55555	Acc.
55557	Acc.
55560	Acc.
55561	Acc.
55563A	Acc.
55566	Acc.
55568	Acc.
55569	Acc.
55572	Acc.
55580	Acc.
55580A	Acc.
55581	Acc.
55581A	Acc.
55582	Acc.
55584	Acc.
55585	Acc.
55587	Acc.
55589	Acc.
3322 142 11401	Acc.

Acc. = Accessories
I.T. = Instrument tubes
M = Monitor and display tubes
S.C.T. = C-R tubes for special applications

MAINTENANCE TYPE LIST

Maintenance types are available for equipment maintenance. No longer recommended for equipment production.

D10–170..

D13–500GH/01

D18–120..

DG7–5

DG7–6

E10–12..

E10–130..

OBSOLESCENT TYPE LIST

Obsolescent types are available until present stocks are exhausted. Abridged data are included in this Handbook.

D13–26..

D13–26../01

D13–451../45

L14–110GH/55

L14–130GH/55

GENERAL AND SCREEN TYPES

INSTRUMENT TUBES

MONITOR AND DISPLAY TUBES

CRTs FOR SPECIAL APPLICATIONS

ASSOCIATED ACCESSORIES

INDEX
MAINTENANCE TYPE LIST
OBSOLESCENT TYPE LIST

Electronic components and materials for professional, industrial and consumer uses from the world-wide Philips Group of Companies

Argentina: FAPESA I.y.C., Av. Crovara 2550, Tablada, Prov. de BUENOS AIRES, Tel. 652-7438/7478.
Australia: PHILIPS INDUSTRIES HOLDINGS LTD., Elcoma Division, 67 Mars Road, LANE COVE, 2066, N.S.W., Tel. 427 08 88.
Austria: ÖSTERREICHISCHE PHILIPS BAUELEMENTE Industrie G.m.b.H., Triester Str. 64, A-1101 WIEN, Tel. 62 91 11.
Belgium: M.B.L.E., 80, rue des Deux Gares, B-1070 BRUXELLES, Tel. 523 00 00.
Brazil: IBRAPE, Caixa Postal 7383, Av. Brigadeiro Fari Alima, 1735 SAO PAULO, SP, Tel. (011) 211-2600.
Canada: PHILIPS ELECTRONICS LTD., Electron Devices Div., 601 Milner Ave., SCARBOROUGH, Ontario, M1B 1M8, Tel. 292-5161.
Chile: PHILIPS CHILENA S.A., Av. Santa Maria 0760, SANTIAGO, Tel. 39-40 01.
Colombia: SADAPE S.A., P.O. Box 9805, Calle 13, No. 51 + 39, BOGOTA D.E. 1., Tel. 600 600.
Denmark: MINIWATT A/S, Emdrupvej 115A, DK-2400 KØBENHAVN NV., Tel. (01) 69 16 22.
Finland: OY PHILIPS AB, Elcoma Division, Kaivokatu 8, SF-00100 HELSINKI 10, Tel. 1 72 71.
France: R.T.C. LA RADIOTECHNIQUE-COMPELEC, 130 Avenue Ledru Rollin, F-75540 PARIS 11, Tel. 355-44-99.
Germany: VALVO, UB Bauelemente der Philips G.m.b.H., Valvo Haus, Burchardstrasse 19, D-2 HAMBURG 1, Tel. (040) 3296-1.
Greece: PHILIPS S.A. HELLENIQUE, Elcoma Division, 52, Av. Syngrou, ATHENS, Tel. 915 311.
Hong Kong: PHILIPS HONG KONG LTD., Elcoma Div., 15/F Philips Ind. Bldg., 24-28 Kung Yip St., KWAI CHUNG, Tel. NT 24 51 21.
India: PEICO ELECTRONICS & ELECTRICALS LTD., Band Box House, 254-D, Dr. Annie Besant Rd., Prabhadevi, BOMBAY-25-DD, Tel. 457 311-5.
Indonesia: P.T. PHILIPS-RALIN ELECTRONICS, Elcoma Division, 'Timah' Building, Jl. Jen. Gatot Subroto, P.O. Box 220, JAKARTA, Tel. 44 163.
Ireland: PHILIPS ELECTRICAL (IRELAND) LTD., Newstead, Clonskeagh, DUBLIN 14, Tel. 69 33 55.
Italy: PHILIPS S.p.A., Sezione Elcoma, Piazza IV Novembre 3, I-20124 MILANO, Tel. 2-6994.
Japan: NIHON PHILIPS CORP., Shuwa Shinagawa Bldg., 26-33 Takanawa 3-chome, Minato-ku, TOKYO (108), Tel. 448-5611.
(IC Products) SIGNETICS JAPAN, LTD, TOKYO, Tel. (03)230-1521.
Korea: PHILIPS ELECTRONICS (KOREA) LTD., Elcoma Div., Philips House, 260-199 Itaewon-dong, Yongsan-ku, C.P.O. Box 3680, SEOUL, Tel. 794-4202.
Malaysia: PHILIPS MALAYSIA SDN. BERHAD, Lot 2, Jalan 222, Section 14, Petaling Jaya, P.O.B. 2163, KUALA LUMPUR, Selangor, Tel. 77 44 11.
Mexico: ELECTRONICA S.A. de C.V., Varsovia No. 36, MEXICO 6, D.F., Tel. 533-11-80.
Netherlands: PHILIPS NEDERLAND B.V., Afd. Elonco, Boschdijk 525, 5600 PD EINDHOVEN, Tel. (040) 79 33 33.
New Zealand: PHILIPS ELECTRICAL IND. LTD., Elcoma Division, 2 Wagener Place, St. Lukes, AUCKLAND, Tel. 867 119.
Norway: NORSK A/S PHILIPS, Electronica, Sørkedalsveien 6, OSLO 3, Tel. 46 38 90.
Peru: CADESA, Rocca de Vergallo 247, LIMA 17, Tel. 62 85 99.
Philippines: PHILIPS INDUSTRIAL DEV. INC., 2246 Pasong Tamo, P.O. Box 911, Makati Comm. Centre, MAKATI-RIZAL 3116, Tel. 86-89-51 to 59.
Portugal: PHILIPS PORTUGESA S.A.R.L., Av. Eng. Duharte Pacheco 6, LISBOA 1, Tel. 68 31 21.
Singapore: PHILIPS PROJECT DEV. (Singapore) PTE LTD., Elcoma Div., P.O.B. 340, Toa Payoh CPO, Lorong 1, Toa Payoh, SINGAPORE 12, Tel. 53 88 11.
South Africa: EDAC (Pty.) Ltd., 3rd Floor Rainer House, Upper Railway Rd. & Ove St., New Doornfontein, JOHANNESBURG 2001, Tel. 614-2362/9.
Spain: COPRESA S.A., Balmes 22, BARCELONA 7, Tel. 301 63 12.
Sweden: A.B. ELCOMA, Lidingövägen 50, S-115 84 STOCKHOLM 27, Tel. 08/67 97 80.
Switzerland: PHILIPS A.G., Elcoma Dept., Allmendstrasse 140-142, CH-8027 ZÜRICH, Tel. 01/43 22 11.
Taiwan: PHILIPS TAIWAN LTD., 3rd Fl., San Min Building, 57-1, Chung Shan N. Rd, Section 2, P.O. Box 22978, TAIPEI, Tel. 5513101-5.
Thailand: PHILIPS ELECTRICAL CO. OF THAILAND LTD., 283 Silom Road, P.O. Box 961, BANGKOK, Tel. 233-6330-9.
Turkey: TÜRK PHILIPS TICARET A.S., EMET Department, Inonu Cad. No. 78-80, ISTANBUL, Tel. 43 59 10.
United Kingdom: MULLARD LTD., Mullard House, Torrington Place, LONDON WC1E 7HD, Tel. 01-580 6633.
United States: (Active devices & Materials) AMPEREX SALES CORP., Providence Pike, SLATERSVILLE, R.I. 02876, Tel. (401) 762-9000.
(Passive devices) MEPCO/ELECTRA ING., Columbia Rd., MORRISTOWN, N.J. 07960, Tel. (201) 539-2000.
(IC Products) SIGNETICS CORPORATION, 811 East Arques Avenue, SUNNYVALE, California 94086, Tel. (408) 739-7700.
Uruguay: LUZILECTRON S.A., Rondeau 1567, piso 5, MONTEVIDEO, Tel. 9 43 21.
Venezuela: IND. VENEZOLANAS PHILIPS S.A., Elcoma Dept., A. Ppal de los Ruices, Edif. Centro Colgate, CARACAS, Tel. 36 05 11.

A13

© 1979 N.V. Philips' Gloeilampenfabrieken

This information is furnished for guidance, and with no guarantees as to its accuracy or completeness; its publication conveys no licence under any patent or other right, nor does the publisher assume liability for any consequence of its use; specifications and availability of goods mentioned in it are subject to change without notice; it is not to be reproduced in any way, in whole or in part, without the written consent of the publisher.

Printed in The Netherlands

9398 107 50011